Aries 130 rev 2

Spare Parts Manual

Standard # 9635-00-000

ITW Trans Tech: Complete Pad Printing Solutions

ITW TRANS TECH • *An ITW Decorating Company* • 475 North Gary Avenue • Carol Stream, IL 60188-4900
Phone: 630.752.4000 • **Fax:** 630.752.4489 • **Web Site:** www.itwtranstech.com

While every effort has been made to ensure the accuracy of this manual, Trans Tech cannot be held responsible for any errors or omissions. We reserve the right to make changes to technical specifications without prior notice.

ITW Trans Tech , *An Illinois Tool Works Company* • 475 North Gary Avenue • Carol Stream, IL 60188-4900
Phone: (630) 752-4000

Contents

Guarding 4
Chasis 6
Pad Ram Slide 8
Pneumatics 10
Electrics 12
Cup Accessories 14
Ink Cup 15

2c - 9/09
2b - 5/09
Revised Dec. 2008

Guarding

105-00-145	magnetic plug
501-00-028	socket head cap screw
501-00-029	socket head cap screw
501-00-368	socket flat head cap screw
501-02-381	socket flat head cap screw
501-02-394	socket flat head cap screw
501-02-396	socket flat head cap screw
501-32-020	socket flat head cap screw
501-34-005	socket button head cap screw
501-34-007	socket button head cap screw
501-34-008	socket button head cap screw
501-34-010	socket button head cap screw
531-30-006	flat washer
541-00-013	t-nut M6
601-01-004	end cap
601-01-012	hinge, steel
601-05-140	knob, black
601-33-005	lift-off hinge
601-33-010	lift-off hinge
9632-60-002	magnetic door catch
9632-60-003	door catch
9632-60-004	door spacer
9632-60-008	lexan guard, left hand
9632-60-009	lexan guard, right hand
9632-60-010	front side guard
9632-60-012	side guard
9632-60-013	vertical profile, left hand
9632-60-014	long horizontal profile
9632-60-015	horizontal profile, left hand
9632-60-016	vertical profile, right hand
9632-60-017	horizontal profile, right hand
9632-60-027	top cover
9632-60-028	face cover
9632-60-044	hinge spacer
9635-60-029	back cover
9640-80-035	control’s face plate

GUARDING

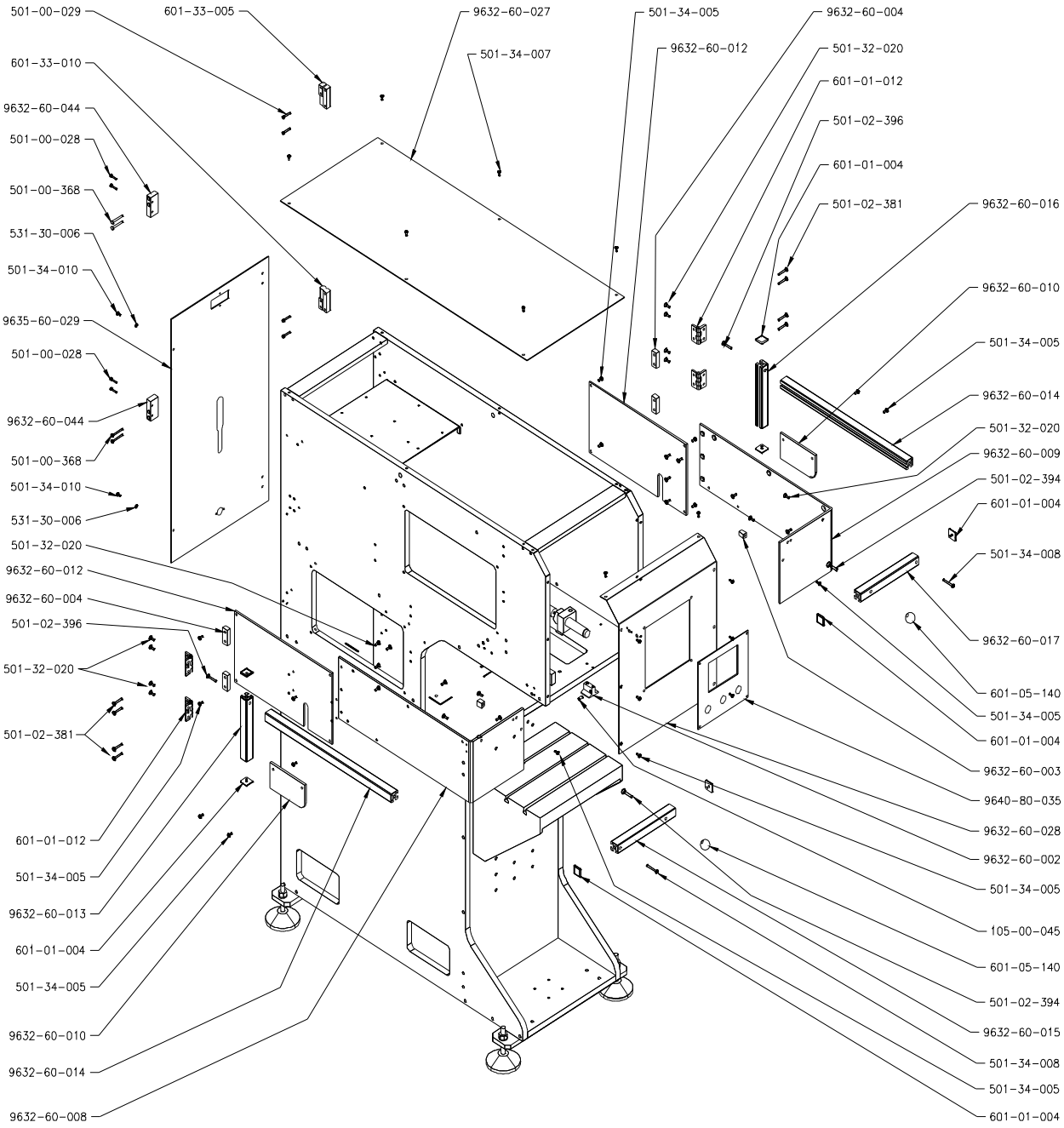
501-00-029
601-33-005
9632-60-027
501-34-007
501-34-005
9632-60-012
9632-60-004
501-32-020
601-01-012
501-02-396
601-01-004
501-02-381
601-33-010
9632-60-044
501-00-028
501-00-368
531-30-006
501-34-010
9635-60-029
501-00-028
9632-60-044
501-00-368
501-34-010
531-30-006
501-32-020
9632-60-012
9632-60-004
501-02-396
501-32-020
501-02-381
601-01-012
501-34-005
9632-60-013
601-01-004
501-34-005
9632-60-010
9632-60-014
9632-60-008
9632-60-016
9632-60-010
501-34-005
9632-60-014
501-32-020
9632-60-009
501-02-394
601-01-004
501-34-008
9632-60-017
601-05-140
501-34-005
601-01-004
9632-60-003
9640-80-035
9632-60-028
9632-60-002
501-34-005
105-00-045
601-05-140
501-02-394
9632-60-015
501-34-008
501-34-005
601-01-004

Chassis

090-13-002	vibration pad
090-13-003	adjustable levelers (feet)
230-00-040	shock absorber
501-00-041	socket head cap screw
501-00-043	socket head cap screw
501-00-094	socket head cap screw
501-20-030	dowel pin
501-20-041	dowel pin
501-30-042	socket head cap screw
501-30-044	socket head cap screw
501-30-062	socket head cap screw
501-30-063	socket head cap screw
501-30-064	socket head cap screw
501-30-075	low head socket cap screw
501-30-081	socket head cap screw
522-30-035	hex nut
532-03-056	washer
9211-50-002	knee – bolt-on
9632-50-001	stiffener support
9632-50-002	plate- top
9632-50-010	mounting block – shock
9632-50-014	flow control bracket
9632-50-018	stiffener support shim
9632-50-030	electrical panel
9635-50-001	plate - bottom
9635-50-003	side plate - left
9635-50-004	knee – face plate
9635-50-005	front base support
9635-50-006	foot -printer support
9635-50-007	upper support bracket
9635-50-011	lower rear cross support
9635-50-012	side plate - right
9640-01-024	screw - adjustment
9640-01-025	confinement screw out plate
9640-01-026	confinement screw in plate
9635-50-023	bat - X - adjustment

CHASSIS

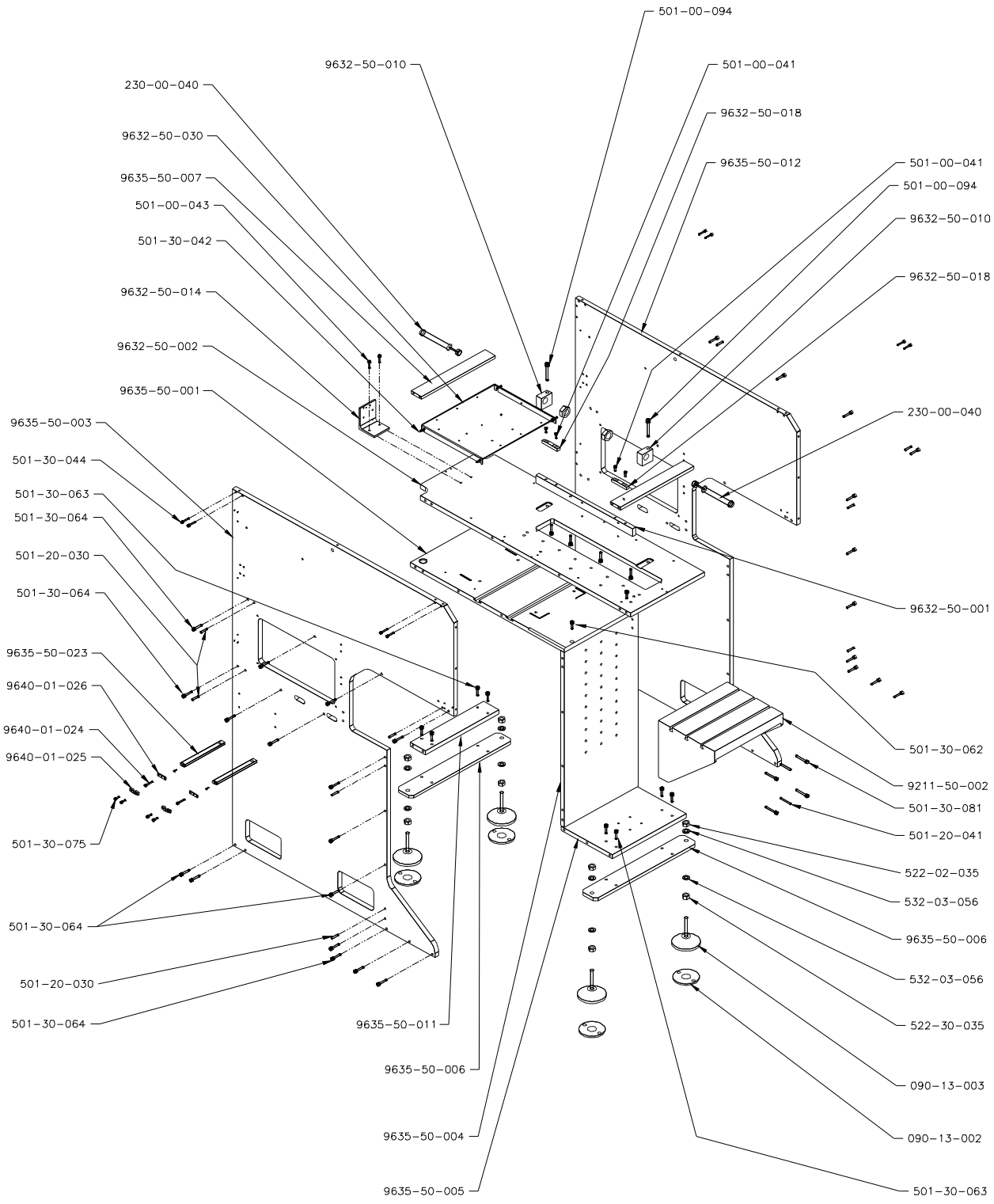
501-00-094
9632-50-010
501-00-041
230-00-040
9632-50-018
9632-50-030
9635-50-012
501-00-041
9635-50-007
501-00-094
501-00-043
9632-50-010
501-30-042
9632-50-018
9632-50-014
9632-50-002
9635-50-001
230-00-040
9635-50-003
501-30-044
501-30-063
501-30-064
501-20-030
501-30-064
9632-50-001
9635-50-023
9640-01-026
9640-01-024
9640-01-025
501-30-062
9211-50-002
501-30-081
501-20-041
501-30-075
522-02-035
532-03-056
501-30-064
9635-50-006
532-03-056
501-20-030
522-30-035
501-30-064
9635-50-011
090-13-003
9635-50-006
090-13-002
9635-50-004
501-30-063
9635-50-005

Pad Ram

001-40-002	bearing rail
001-40-055	bearing block
001-40-060	bearing block
004-08-070	track roller
021-12-010	timing pulley
030-17-005	timing belt
104-00-502	spring connector
104-00-510	extension spring
201-01-115	cylinder
202-01-120	cylinder
205-05-230	tubing, pvc
209-01-025	clevis foot, cylinder
209-01-029	rod eye
209-01-100	swivel flange, cylinder
209-00-300	alignment coupler
303-00-003	ring terminal
352-07-025	encoder
501-00-047	socket head cap screw
501-00-064	socket head cap screw
501-00-038	socket head cap screw
501-05-018	shoulder screw
501-20-021	dowel pin
501-20-030	dowel pin
501-30-004	socket head cap screw
501-30-043	socket head cap screw
501-30-063	socket head cap screw
501-30-064	socket head cap screw
501-30-065	socket head cap screw
501-30-070	socket head cap screw
501-30-078	socket head cap screw
501-30-085	socket head cap screw
501-30-090	socket head cap screw
501-34-010	socket button head cap screw
521-50-050	hex nut
761-00-065	loop strap, cushioned
9632-02-001	pad slide plate
9632-02-011	stop block
9632-02-013	spacer plate- linear cylinder
9641-02-004	angle - bearing block
9641-02-006	mount rod coupler
9641-02-008	bearing rail – modified
9641-02-009	encoder mount
9641-02-010	pad mount bar
9641-02-012	cable support bracket

PAD RAM ASSEMBLY

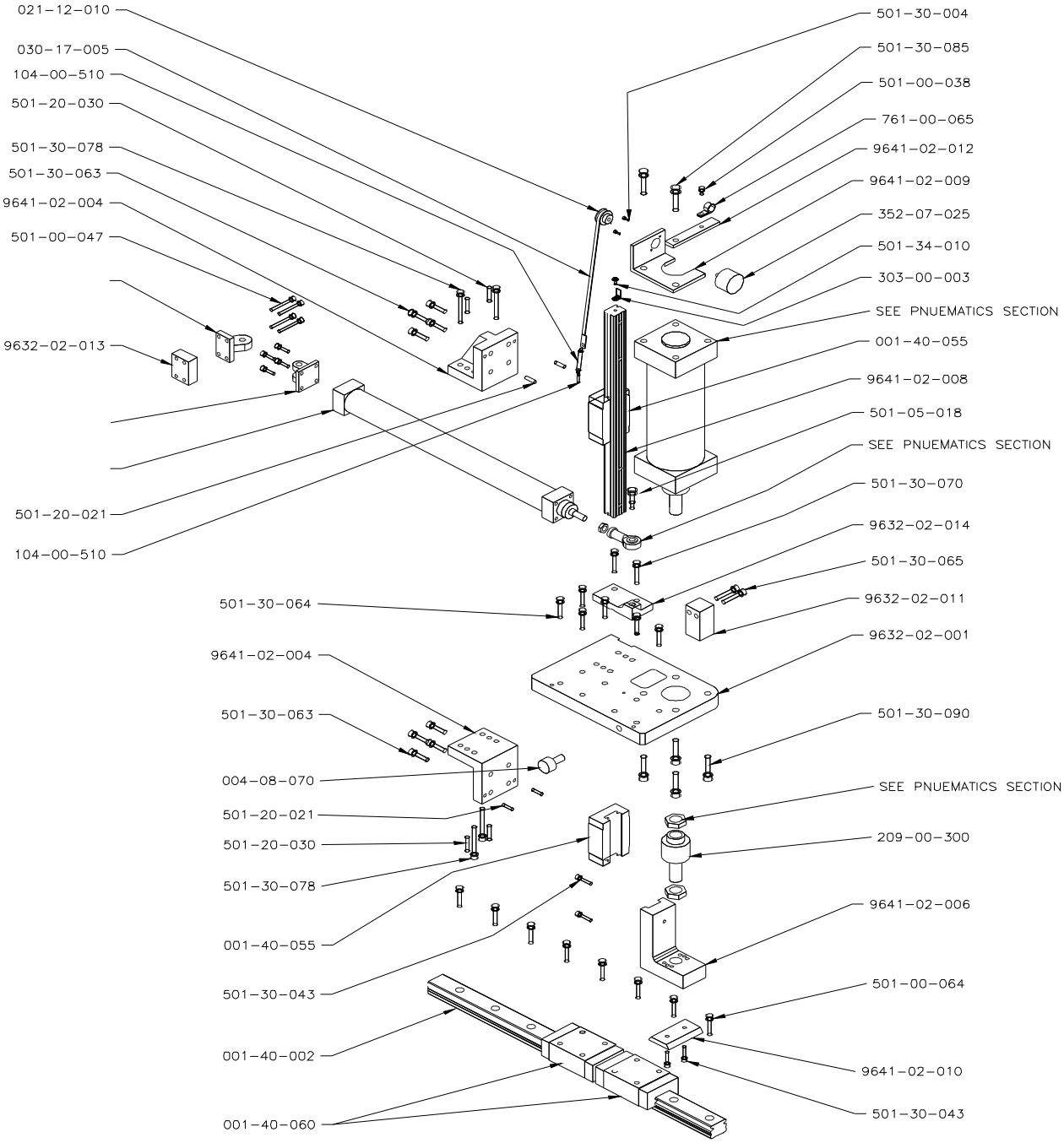

Pneumatics

201-01-115	cylinder
202-01-061	valve terminal
202-01-090	1-way control valve
202-01-091	1-way control valve
202-01-120	cylinder
204-01-174	double nipple
202-01-176	non-return valve
204-01-206	elbow fitting
204-01-209	push-in fitting
204-01-212	push-in L-fitting
204-01-215	Multiple distributor
204-01-216	push-in fitting
204-01-221	push-in L-fitting
204-01-223	adaptor
204-01-225	push-in fitting
204-01-228	push-in fitting
204-07-051	hose coupling plug
209-01-025	clevis foot
209-01-029	rod eye
209-01-100	swivel flange
216-01-003	hex bushing, brass
230-01-150	service unit D-series assembly
240-01-200	reducing sleeve
331-01-020	pressure switch
332-00-025	proximity sensor
332-00-085	socket connector cable, right angle
332-00-086	socket connector cable, straight
521-50-050	hex nut

PNUEMATICS

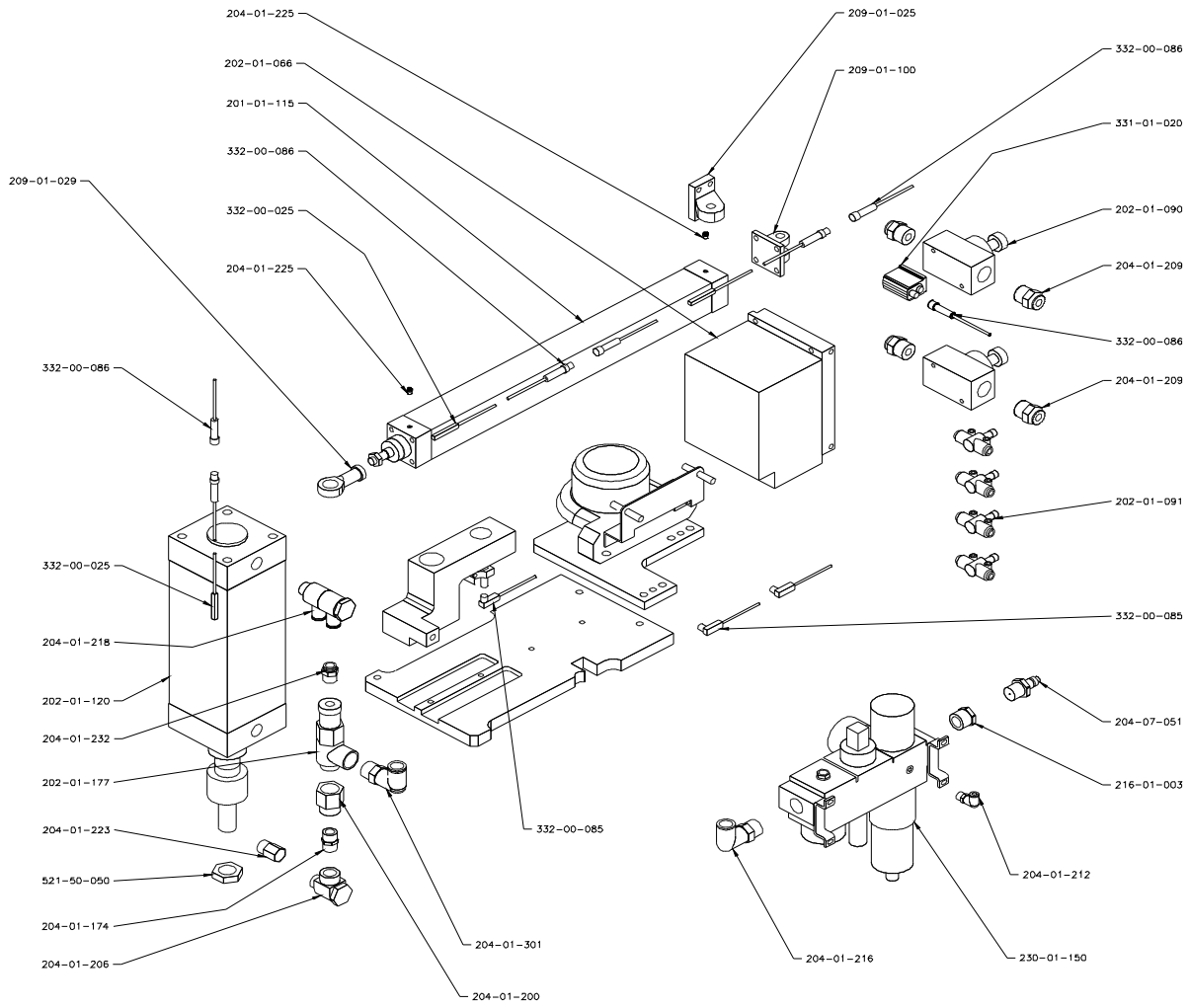
204-01-225
202-01-066
201-01-115
332-00-086
209-01-029
332-00-025
204-01-225
332-00-086
332-00-025
204-01-218
202-01-120
204-01-232
202-01-177
204-01-223
521-50-050
204-01-174
204-01-206
204-01-200
204-01-301
332-00-085
209-01-025
209-01-100
332-00-086
331-01-020
202-01-090
204-01-209
332-00-086
204-01-209
202-01-091
332-00-085
204-07-051
216-01-003
204-01-212
230-01-150
204-01-216

Electrical

322-05-010	plug, connector (9 contact)
302-02-015	wireway
302-02-015	wireway cover
303-01-002	terminal block
303-01-007	earth ground terminal
303-01-008	jumper
303-01-016	end barrier
303-01-100	marker card
305-12-010	power cord
312-08-015	suppressor, 115vac
312-17-010	power supply, 24v, 50w
321-06-043	plc (programmable logic controller)
321-06-201	plc backup battery
322-03-001	foot switch receptacle
322-05-039	contact socket
322-05-044	cable clamp
331-19-001	magnetic guard door switch
333-03-008	green pushbutton, with contact block
333-03-009	red pushbutton, with contact block
333-03-013	red mushroom head pushbutton
333-03-022	contact block, n.o.
343-00-011	relay socket
343-00-017	relay
353-01-010	fuse, 5 amp
354-02-025	main disconnect switch
361-24-006	communication cable
361-24-015	touch screen
369-12-010	resistor, 3.3k ohm
369-13-010	capacitor
391-11-005	communication cable
392-01-001	din rail
394-01-025	wire tie mount
524-16-045	captive nuts
9640-80-035	control face plate

Electrical Panels

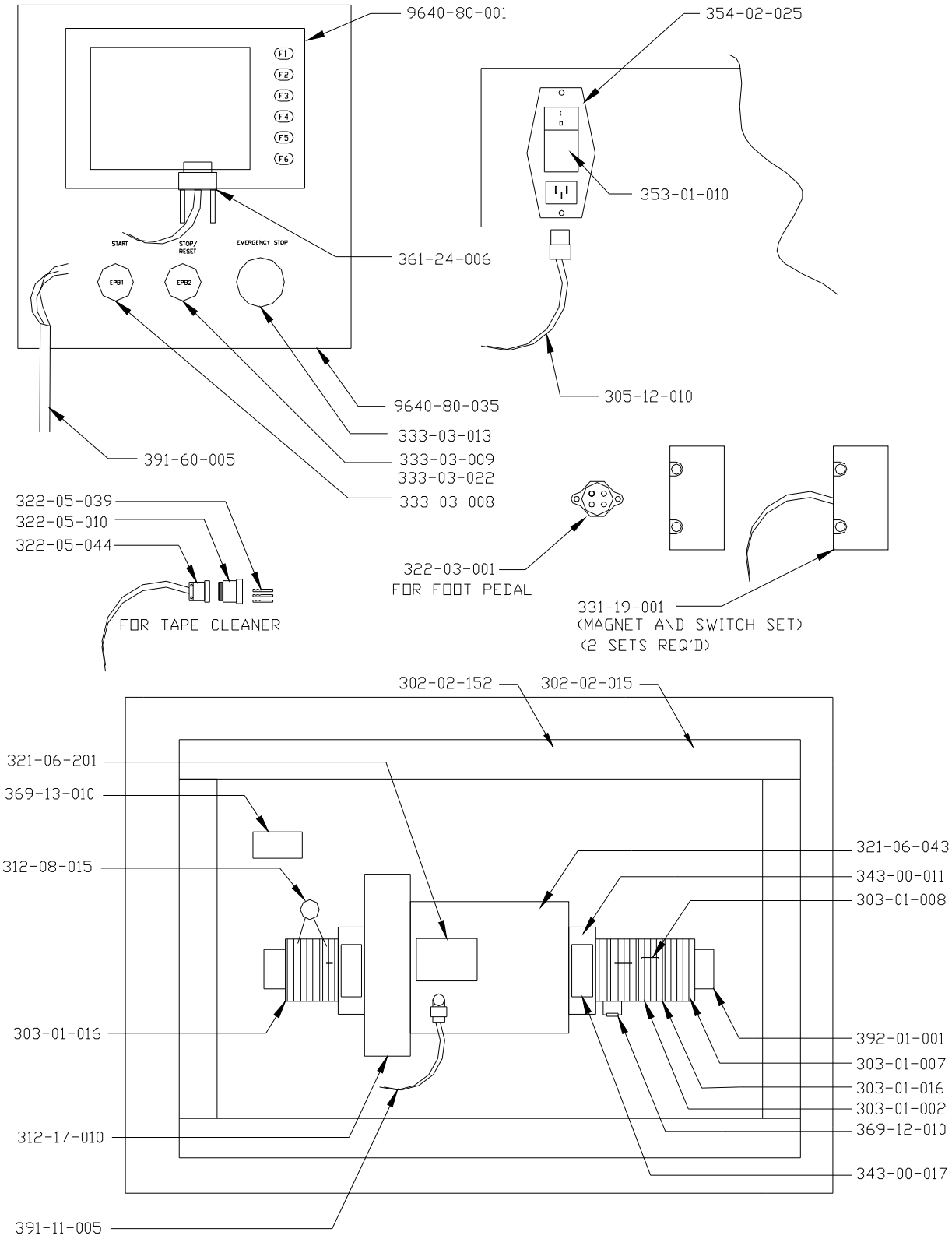

SETUP TABLE

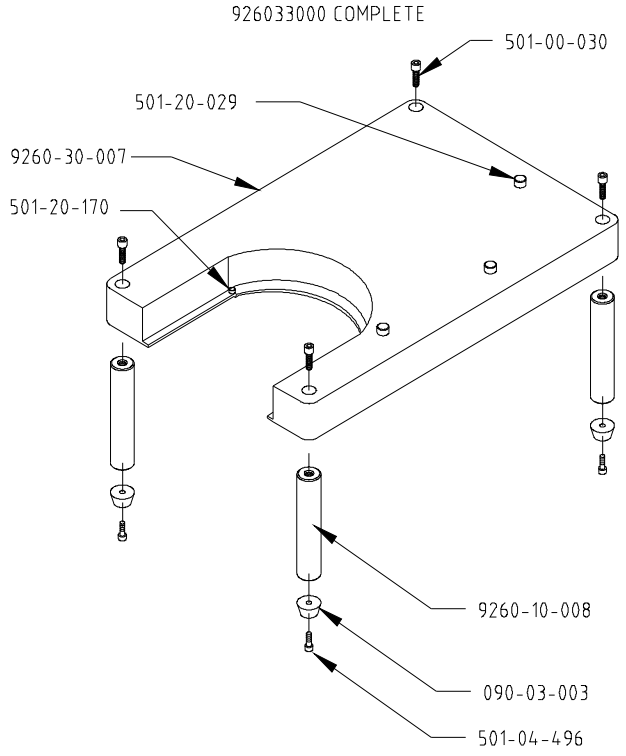

SETUP TOOL

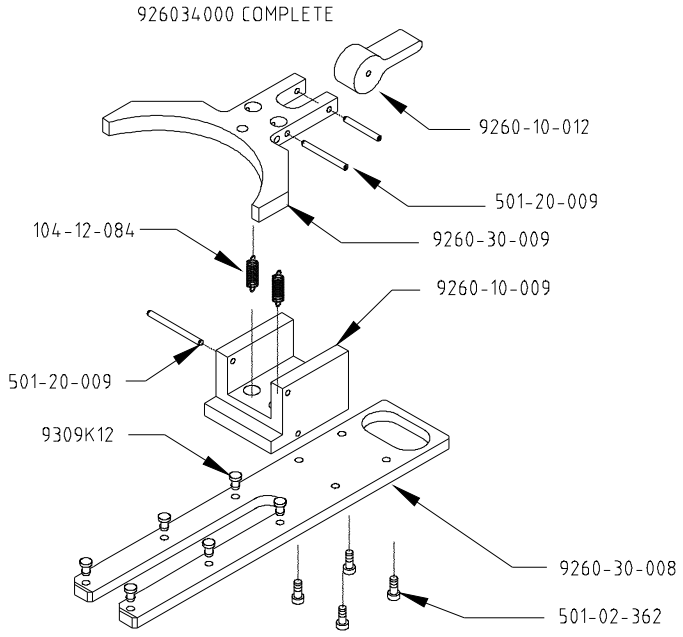

130 MM INK CUP
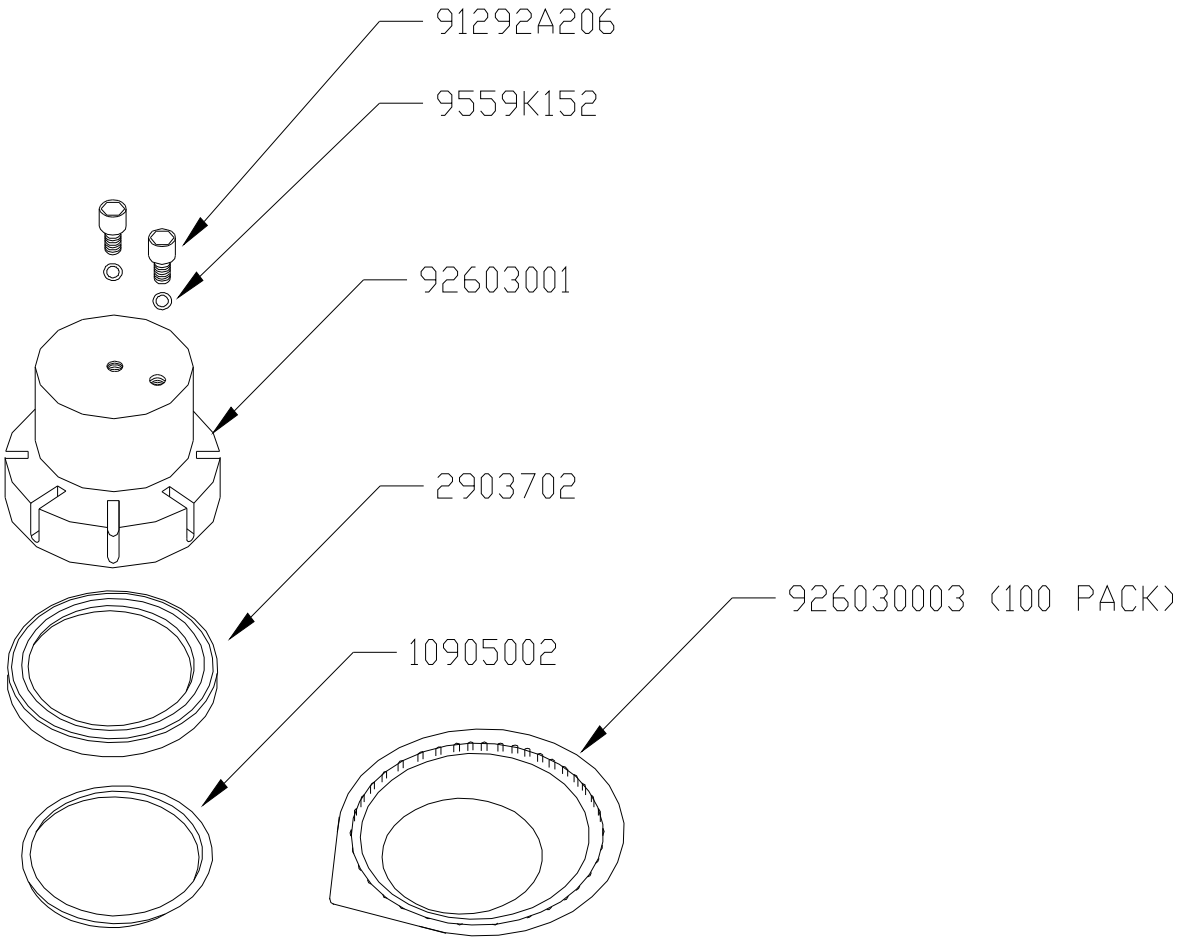
926032000 COMPLETE