Carousel 80 (Release 2)

Operator's Manual

Trans Tech: Complete Pad Printing Solutions

TRANS TECH AMERICA Inc. • *An ITW Decorating Company* • 475 North Gary Avenue • Carol Stream, IL 60188-4900
Phone: 630.752.4000 • **Fax:** 630.752.4489 • **Web Site:** www.itwtranstech.com

For best results when printing this file, set printer resolution to 300 dpi.

While every effort has been made to ensure the accuracy of this manual, Trans Tech cannot be held responsible for any errors or omissions. We reserve the right to make changes to technical specifications without prior notice.

Trans Tech America, Inc. *An Illinois Tool Works Company* • 475 North Gary Avenue • Carol Stream, IL 60188-4900
Phone: (630) 752-4000

Revised Nov. 2001

Contents

Safety 4
- Symbols and their Interpretations 4
- Liability 4
- General Warnings and Cautions 4
- Application Restrictions 4

Installation Instructions 5
- Warnings and Cautions 5
- Selecting the Location 5
- Leveling the Machine 5
- Connecting to Power 5
- The Operating Controls 7
- The Setup Menu 9
- Manual Operation 10
- Automatic Operation 11

The Printing Operation 14
- Preparing the Ink Cup and Cliche 14
- Handling of the Ink Cup 14
- Installing the Ink Cup and Cliche 15
- Adjusting Position of the Image 16
- Removing Ink Cup and Cliche Assembly 17
- Handling of the Ink Cup 17
- Assembling and Adjusting the Pad 18
- Adjusting the Workpiece Table 18

Guideline for Operating the Printer 19

Technical Information 20
- Machine Specifications 20
- Machine Dimensions 21

Maintenance 22
- General Information 22
- Switch Timing 23
- Preventative Maintenance Schedule 24
- Lubrication Schedule 25
- Machine Alarm Messages and Troubleshooting Guide 26
- Electrical Schematics 27

Index 31

Safety

Symbols and their Interpretations

WARNING: Neglecting a safety instruction identified with the WARNING symbol may lead to personal injury.

CAUTION: Neglecting a safety instruction identified with the CAUTION symbol may lead to property damage.

POINTER: It is strongly recommended to observe instructions identified with a POINTER symbol.

Liability

- In no event will *Trans Tech America* be responsible or liable for indirect or consequential damages resulting from the use of this equipment.
- The information contained in this manual is subject to change due to improvements in design.
- Though this document has been checked for inaccuracies, *Trans Tech America* does not assume responsibility for any errors contained herein.
- This manual is provided as an aid when operating the Carousel 80 pad printing machine. Prior to operation, it is strongly advised that the user be thoroughly familiar with the Carousel 80 operating manual.
- *Trans Tech America* is not responsible or liable for any disadvantage occurred for not following the operating instructions.

- All operators must be adequately trained.

General Warnings and Cautions

- Switch off main disconnect switch prior to connecting/disconnecting power.
- Disconnect power prior to opening the electrical enclosure.

- Switch the main disconnect off and disconnect power prior to working on the electrical system.

Application Restrictions

- Any use other than described in this manual may cause damage to the equipment, personal injury or property damage.

Installation Instructions

Warnings and Cautions

The machine operates on 220 volts, single phase AC power.

Switch off main disconnect switch prior to connecting power.
Be alert and verify that safe start-up conditions exist prior to switching on the main disconnect switch.

Apply oil or a thin layer of grease to unprotected ferrous parts to prevent rusting, especially after cleaning with solvents.

Selecting the Location

Choose a well ventilated area away from direct sunlight to install your pad printing machine. The ideal conditions for the inks used in pad printing are approximately 20° C (68° F) and 40 - 60 % humidity. Make sure the machine is positioned away from walls and other obstructions and placed on a flat surface. The guards, operating panel and other machine openings must be accessible. Ensure adequate area for setup tooling and for storage of parts before and after printing.

Leveling the Machine

Before operation, the machine must be leveled. The level of the machine is adjusted by four (4) feet, one at each corner.

Level the machine as follows:
1. Loosen upper jam nuts.
2. Place bubble levels on machine base, one parallel to the long side of the base and another parallel to the short side of the base.
3. Adjust left front and left rear feet until bubble level on the long side reads level. It may be necessary to ‘follow’ with the right rear to keep machine stable if big adjustments are required.
4. Adjust right and left rear feet evenly until bubble level on the short side reads level.
5. It may be necessary to repeat steps 3 and 4 several times until both levels read level and the weight is evenly distributed on the four feet.
6. Turn the upper jam nuts counterclockwise to tighten.

Connecting to Power

The machine is equipped with a power cord and supplied with a NEMA 6-15 plug. The machine requires 208 - 240 VAC, 4.5A, single phase power.

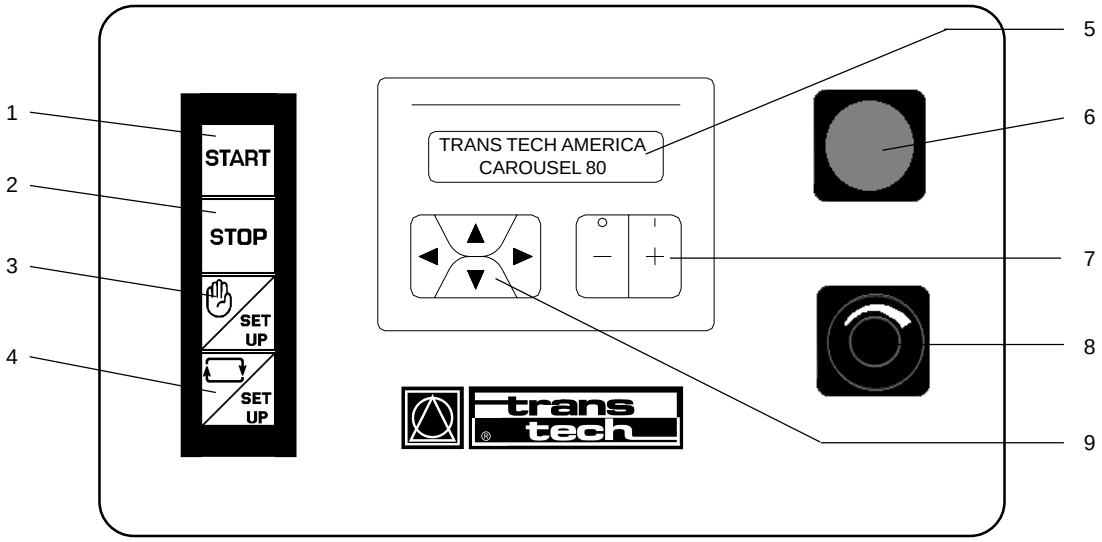

1 Cycle Start button
2 Cycle Stop button
3 Manual Mode / Setup button
4 Continuous Cycle / Setup button
5 Controller Display Window
6 Emergency Stop button
7 Options ON/OFF and Increase/Decrease Value Keypad
8 Cycle Speed control
9 Cursor Control and Manual Jog Keypad

The Operating Controls

The controls are active after main disconnect is turned on and E-Stop is reset. The Start button and Stop button indicator lamps will be illuminated.

Start Machine Cycle (1)

· Press the Start button begin a printing cycle.

Display Production Rate.

· While operating in Continuous Cycle, the current production rate may be viewed by pressing and holding the Start button. Release to return to normal display.

Stop Machine Cycle (2)

· Press the Stop button to initiate a cycle stop. The machine will not stop immediately. It will complete the active print cycle and stop in the home position. The indicator light will illuminate when the machine is in the home position.

Manual Mode / Setup (3)

Active when the button is in the pressed position (the indicator light is illuminated). When pressed, operation of the machine in Jog Mode is enabled.

· The external automation start pulse is disabled.
· The cycle counter will not count.
· The pad delay is disable.

Used with Continuous Cycle Button to enter the Setup Menu.

Continuous Cycle Mode / Setup (4)

Single Cycle

The button is in the released position (the indicator light is off). When released, the machine will print in Single Cycle Mode.

Continuous Cycle

The button is in the pressed position (the indicator light is illuminated). When pressed, the machine will print in Continuous Cycle Mode.

· The printer speed can be set with the speed control knob on the operating panel.
· The cycle counter is active.
· The pad print delay is enabled.

Used with Manual Mode button to enter the Setup Menu.

&

Setup Menu (3 and 4)

To access the Setup Menu, the Manual Mode / Setup button and the Continuous Cycle / Setup button are in the pressed position (the indicator lights are illuminated).

· The ‘NUMBER OF PRINTS’ (1,2,3,4) can be preset.
· The ‘PAD DELAY’ function can be selected ‘ON/OFF.
· The ‘PAD DELAY’ time can be preset.
· The ‘INDEX TABLE’ can be selected ‘ON/OFF’.
· The ‘TOTAL COUNT’ can be displayed.
· The ‘TOTAL COUNT’ cycle counter can be reset.
· The ‘BATCH COUNT’ function can be selected ‘ON/OFF’.
· The ‘BATCH’ count can be preset.
· The display can be set to continuously show the ‘CYCLE RATE’.
· The display can be set to continuously show the ‘BATCH COUNT’.
· The ‘PAD CLEAN’ function can be selected ‘ON/OFF. (optional)
· The ‘PAD CLEAN’ count can be preset. (optional)
· The ‘PAD CLEAN’ stroke can be preset. (optional)

The Operating Controls (continued)

Jog Keypad (9)

· Active when Manual Mode is selected.

Jog Forward

· The printer runs forward while the Jog Forward arrow is pressed.

Jog Reverse

· The printer runs reverse while the Jog Reverse arrow is pressed.

Jog Automation

· The Automation indexes once each time the Jog Automation arrow is pressed.

Cursor Control (9)

· Active when in the Setup Menu.

Cursor Up

· The cursor moves up one line each time the arrow is pressed.

Cursor Down

· The cursor moves down one line each time the arrow is pressed.

Cursor Right

· The cursor moves right one position each time the arrow is pressed.

Cursor Left

· The cursor moves left one position each time the arrow is pressed.

Options ON/OFF and Increase/Decrease Value Keypad (7)

· Active when in the Setup Menu.

Select ON / Increase

· Options are selected ON.

· Variable values are increased. The value is increased one count for each time the button is pressed. If the button is held down, the value will increase by ones, then tens, then hundreds, etc. to the maximum for the option.

Select OFF / Decrease

· Options are selected OFF.

· Variable values are decreased. The value is decreased one count for each time the button is pressed. If the button is held down, the value will decrease by ones, then tens, then hundreds, etc. to the minimum for the option.

Cycle Speed Control (8)

· Active during a printing cycle.

· The cycle speed can be adjusted when operating in the Single Cycle or Continuous Cycle modes. Rotate clockwise to increase speed. Rotate counterclockwise to decrease speed.

Emergency Stop Button (6)

· Turn the button clockwise to release.

· Pressing this button will immediately stop all machine motion. The button must be released and the Start button or the Foot Switch must be pressed to restart the machine (the active print cycle will be completed).

WARNING - The Emergency Stop button does not shut off the power to the machine or in the electrical drawer. Switch off the Main Disconnect Switch and disconnect the power cord before servicing the machine or working in the electrical drawer.

Foot Switch

The Foot Switch is used to:

· to start the machine while in Single Cycle Mode. When started via the Foot Switch, the printer will cycle for the number of hits selected and then stop in the home position.

· to start and stop the machine while in Continuous Cycle Mode. When started via the Foot Switch or Start button, the printer will operate until the Stop button or Foot Switch is pressed. The machine will complete the active print cycle and stop in the home position.

The Setup Menu

To access the Setup Menu, the Manual Mode and Continuous Cycle Buttons must both be in the pressed position. When pressed, the buttons are illuminated and the first two lines of the Setup Menu are displayed. To select or modify a feature or an option, place the cursor on the line to be changed (either line 1 or line 2) and press the Options On or Options Off button. Press the Cursor Up or Cursor Down arrows to scroll through the Setup Menu. (See page 8) To exit the Setup Menu, either the Manual Mode Button, the Continuous Cycle Button or both must be in the released (up) position. The indicator lamp(s) will be off.

SETUP MODE
1 NUMBER OF PRINTS

Default Display
1 = number of prints selected

SETUP MODE
1 NUMBER OF PRINTS

The NUMBER OF PRINTS (1,2,3,4,5) can be preset.

- Press the [+] key to increase the number of hits (maximum 5 cycles).
- Press the [-] key to decrease the number of hits.

1 NUMBER OF PRINTS
OFF PAD DELAY

PAD DELAY can be turned ON or OFF (each position is enabled seperately).

- Press the [+] key to turn PAD DELAY ON.
- Press the [-] key to turn PAD DELAY OFF.

OFF PAD DELAY
OFF PAD DELAY X

PAD DELAY is enabled seperately for each position. This screen will be displayed for each position (indicated by the value of X).

- Press the [+] key to enable pad delay for position 1 - 5.
- Press the [-] key to disable pad delay for position 1 - 5.

OFF PAD DELAY X
X.X SECONDS

The PAD DELAY time can be preset from 0.1 to 4.0 seconds for each position.

- Press the [+] key to increase the pad delay time
- Press the [-] key to decrease the pad delay time.

X.X SECONDS
OFF AUTOMATION

The AUTOMATION option can be turned ON or OFF.

- Press the [+] key to turn the automation ON.
- Press the [-] key to turn the automation OFF.

OFF AUTOMATION
OFF 2+2 INDEX

The 2+2 INDEX option can be turned ON or OFF.

- Press the [+] key to turn the index option ON.
- Press the [-] key to turn the index option OFF.

OFF 2+2 INDEX
OFF 2+3 INDEX

The 2+3 INDEX option can be turned ON or OFF.

- Press the [+] key to turn the index option ON.
- Press the [-] key to turn the index option OFF.

The Setup Menu (continued)

OFF 2+3 INDEX
OFF COUNT BATCH

The BATCH COUNTER can be turned ON or OFF.
- Press the [+] key to turn the BATCH COUNTER ON.
- Press the [-] key to turn the BATCH COUNTER OFF.

OFF BATCH COUNT
XXX10 BATCH

The BATCH COUNTER can be preset from 1 to 99999.
- Press the [+] key to increase the BATCH COUNT.
- Press the [-] key to decrease the BATCH COUNT.

XXX10 BATCH
OFF PAD CLEANING

PAD CLEANING can be turned ON or OFF. (optional)
- Press the [+] key to turn PAD CLEANING ON.
- Press the [-] key to turn PAD CLEANING OFF.

OFF PAD CLEANING
XXX RUN TO CLEAN

The RUN TO CLEAN increment can be preset from 1 to 999 print cycles.
- Press the [+] key to increase the PAD CLEANING increment.
- Press the [-] key to decrease the PAD CLEANING increment.

XXX RUN TO CLEAN
X.XX SECONDS

The PAD CLEANING ADVANCE TIME can be preset from 0.01 seconds to 1.00 seconds.
- Press the [+] key to increase the PAD CLEAN ADVANCE TIME.
- Press the [-] key to decrease the PAD CLEAN ADVANCE TIME.

TOTAL COUNT
PRESS + TO RESET

The TOTAL CYCLE COUNTER can be reset to zero.
- Press the [+] key to reset the TOTAL CYCLE COUNTER.

Manual Operation

Manual Mode Button

Before the machine will operate in Manual Mode, the main disconnect switch must be on, E-Stop must be reset and the machine guard and side doors must be closed. The Stop button indicator lamp will be illuminated. To enable Manual Mode, the Manual Mode button must be in the pressed (down) position. The indicator lamp will be illuminated.

Manual Mode Display

TABLE = ^ = JOG
< = REV FWD = >

The following functions are available when Manual Mode is selected.

▶
- Jog machine forward
  - The printer will run forward while the Jog Forward arrow is pressed and stop immediately when the arrow is released.

▲
- Jog Automation (optional)
  - The automation will complete one cycle each time the Jog Automation arrow is pressed.

◀
- Jog machine reverse
  - The printer will run reverse while the Jog Reverse arrow is pressed and stop immediately when the arrow is released.

The printer runs at a fixed speed when in Manual Mode.

Go to index

Automatic Operation

Before the machine will operate in **Automatic Mode**, the main disconnect switch must be on, E-Stop must be reset, the machine guard and side doors must be closed. The Stop button indicator lamp will be illuminated. To enable Automatic Mode, the Manual Mode button must be in the released (up) position. The indicator lamp will be off.

· If the machine guard or side door is opened while the machine is running, the machine will stop immediately. The machine guard and side door must be closed before machine operation can resume.
· If a machine or automation error is detected, the machine will stop immediately. The fault is indicated in the Display Window (see *Machine Alarm Messages and Troubleshooting Guide* page 26). The fault condition must be corrected before machine operation can resume.

SET UP

SINGLE CYCLE
TOTAL CNT. 999999

Single Cycle (Single Print) is selected by placing the Continuous Cycle button in the released (up) position (the indicator lamp is off). Single print is selected from the Setup Menu. Press the Start button to begin a single print cycle.
· The machine will stop in the home position after completing each print cycle.
· The external automation start pulse is enabled.
· The cycle counter will count.
· The batch count function will operate if enabled.
· The pad delay will function if enabled.
· The pad cleaner will operate if installed and enabled.

SET UP

2 X MULTIPRINT
TOTAL CNT. 999999

Single Cycle (Multi - print) is selected by placing the Continuous Cycle button in the released (up) position (the indicator lamp is off). A Multi - print option is selected from the Setup Menu. Press the Start button to begin a print cycle.
· The machine will stop in the home position after completing each print cycle.
· The external automation start pulse is enabled.
· The cycle counter will count.
· The batch count function will operate if enabled.
· The pad delay will function if enabled.
· The pad cleaner will operate if installed and enabled.

The printer will always complete one revolution of the pad carrier for each print cycle, regardless of the number of prints selected. The point in the cycle where the ‘automation run’ signal is sent differs between single print and multi - print. The signal is sent after printing the position that corresponds to the number of prints selected (single - 5). For example, when in single print mode, the signal is sent after the first pad has printed on the part and moved to the up position. The printer will continue to run until the remaining 4 print positions have cycled, then stop. When in 4 X mode, the signal is sent after the fourth pad has printed on the part and moved to the up position. The printer will continue to run until the last print position has cycled, then stop.

Automatic Operation (continued)

CONTINUOUS CYCLE
TOTAL CNT. 999999

Continuous Cycle is selected by placing the Continuous Cycle button in the pressed (down) position (the indicator lamp is on). Press the Start button or foot pedal to begin continuous print cycles.

- The machine will continuously print until the Cycle Stop button or the foot switch is pressed or until the Continuous Cycle button is switched to the released (up) position.
- The total cycle counter and batch counter will increase by 1 at the completion of each print cycle.
- The external automation start pulse is sent.
- The batch count function will operate if enabled.
- The pad delay will function if enabled.
- The pad cleaner will operate if installed and enabled.
- If the batch count function is enabled, the machine will cycle until the counter reaches the preset value and stop in the home position.

! WARNING - If continuous cycle printing is interrupted by pressing the Cylce Stop button, pressing the foot switch or releasing the Continuous Cycle button, the machine will not stop until the print cycle is completed. To stop printer motion immediately, press the E-Stop button.

CYCLE STOP
INITIATED

If continuous cycle printing is interrupted by pressing the Cylce Stop button or the foot switch, the display will read CYCLE STOP INITIATED and the printer will complete the active print cycle.

? X MULTI-PRINT
TOTAL CNT. XXXXXX

If continuous cycle printing is interrupted by releasing the Continuous Cycle button, the display will read ? X MULTI-PRINT or SINGLE CYCLE and the total part count and the printer will complete the active print cycle (? is the number of prints selected).

BATCH CNT XXXXXX
COMPLETED XXXXXX

Batch Count
When BATCH COUNT is enabled, the display shows the BATCH COUNT PRESET value and the number of parts COMPLETED from the current batch run.

ON COUNT BATCH
XXXXX BATCH

Reset the Batch Count
When the batch counter has reached it's preset value, it must be reset before printing can be resumed. To reset the batch counter, the Batch Count function must be turned OFF then turned back ON. Enter the Setup Menu by placing the Manual Mode and Continuous Cycle buttons in the pressed (down) position (see page 9). Scroll to the COUNT BATCH line in the menu and:

- press the [-] key to turn Batch Count OFF, then
- press the [+] key to turn Batch Count ON.

START

PRODUCTION RATE
PARTS/MIN XXX

Production Rate
When printing in Continuous Cycle mode, the current production rate can be displayed by pressing and holding the Start button. Release the Start button to return to the normal display.

Go to index

Automatic Operation (continued)

ON	**2+2 INDEX**
OFF	**2+3 INDEX**

2+2 INDEX is used to print two positions, index the automation and print another two positions, within one printing cycle.
If 2+2 INDEX is on, the Multi - print selections are inactive. The 'automation run' signal is sent after the second pad has printed and again after the fourth pad has printed.

OFF	**2+2 INDEX**
ON	**2+3 INDEX**

2+3 INDEX is used to print two positions, index the automation and print another three positions, within one printing cycle.
If 2+3 INDEX is on, the Multi - print selections are inactive. The 'automation run' signal is sent after the second pad has printed and again after the fifth pad has printed.

When running in 2+2 or 2+3 modes, Total Part Counter and Batch Counter values are increased by one at the end of the print cycle (one complete revolution of the pad carrier), even though two finished parts may be produced. Adjust Total Part Counter and Batch Counter values to fit your specific printing application.

When the printer is not equipped the the optional 5th color station, the empty print position is station number 1. Pad delay settings for pad 1 should not be programmed, as the delay will occur when the empty station is moving down over the workpiece.

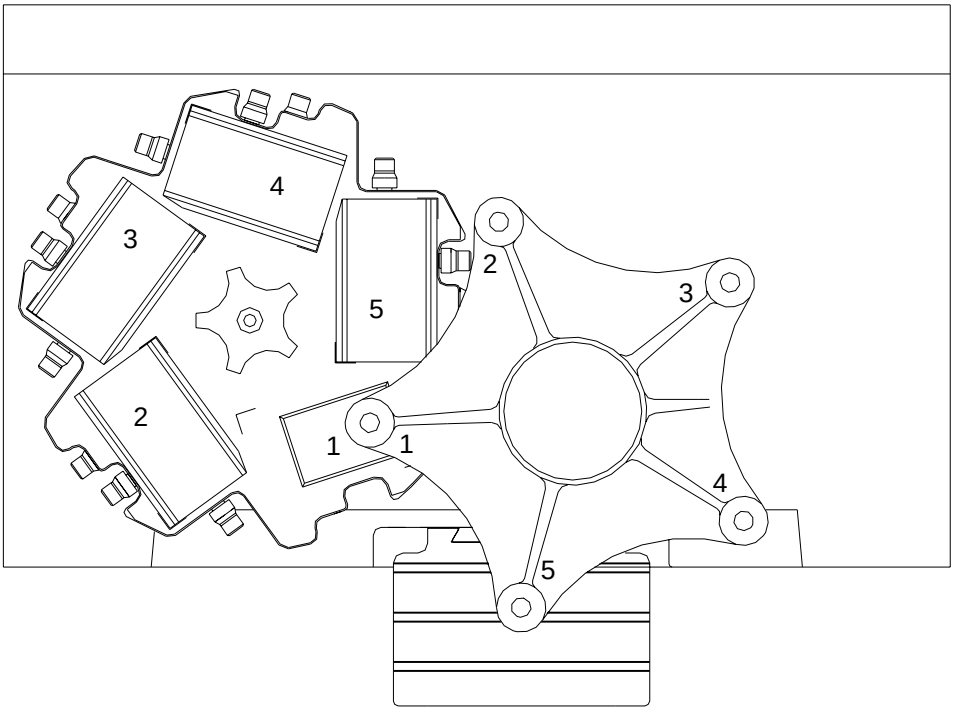

When the printer is equipped with the optional 5th color station, the end of the print cycle occurs when the pad has reached the top of it's travel after picking up the image from station 1. When the machine is equipped with an indexing device and running in Continuous Print mode, there may be a slight hesitation in the cycle (pad safety) while the indexer is moving into position. When the printer is stopped, the station 1 image will dry on the pad. If the printer is not equipped with the optional pad cleaner, the dried image must be cleaned from the pad. Upon restart, the station 1 image will not transfer to the first workpiece. Take necessary steps to avoid producing an incomplete print (i.e. print remaining images on paper, tape, etc.).

The Printing Operation

Preparing the Ink Cup and Cliche

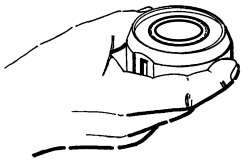

Fill the ink cup with properly thinned and mixed ink until the magnet is just covered.

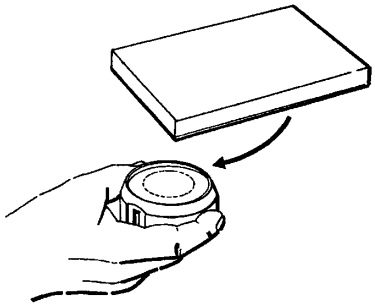

Prepare the cliche and hold with image side towards the cup.

If using a steel foil or plastic cliche, care must be exercised to ensure that the magnet plate (used to hold the cliche) and cliche are clean and free from burrs before assembly and that the cliche is properly positioned over the locating pins. (Ask your sales representative for a copy of instruction “How To Mount Cliches On Magnet Plates” if further explanation is desired.)

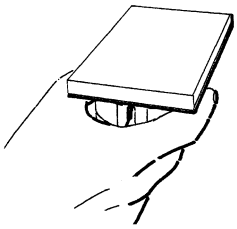

Set approximately ½” of the image end of the cliche on the edge of the doctor ring, making sure to keep the cliche and surface of the doctor ring parallel. Slide the plate to center the image in the ink cup.

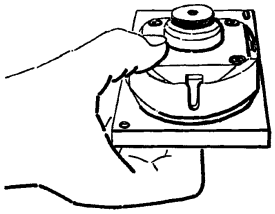

Verify the position of the ink cup on the cliché (the cup is over the image and not off the edge of the cliché). Hold the cup and cliché as shown and turn the assembly over placing the ink cup on top.

Handling of the Ink Cup

- Always protect the doctor ring from being damaged.
- Rotate the cup frequently (steel cliche 2 hrs., polymer cliche 1 hr.) while in operation.

WARNING

The doctor ring has a very sharp edge that may cause personal injury if improperly handled.
PLEASE HANDLE WITH CAUTION!

Installing the Ink Cup and Cliche

Open machine guard and side doors as required to provide access to install cup and cliche assemblies.

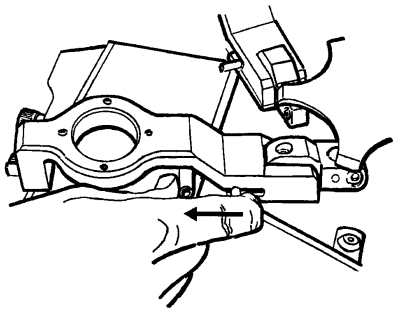

Slide locking pin out from center of cliche carousel and lift driving arm to vertical position.

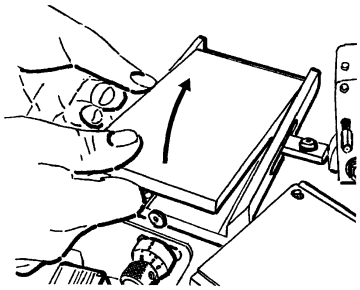

Place the cliche and ink cup assembly into the cliche holder as shown.

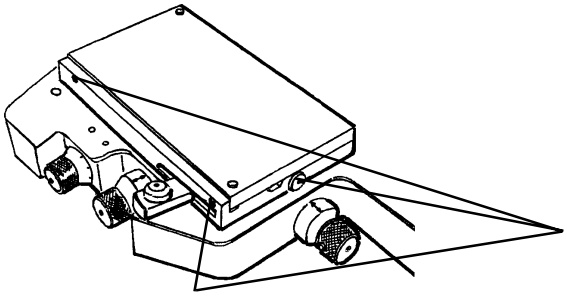

Tighten three (3) locking screws. Do not overtighten! The locking screws need to only prevent the cliche from moving during the printing operation.

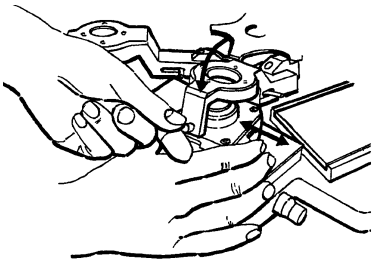

Position ink cup while lowering driving arm so pins in driving arm line up with grooves in ink cup. The driving arm should not be forced over the ink cup (reposition the cup if necessary). Lower driving arm completely, making sure that the locking pin is engaged (lift up on driving arm to confirm that it is locked).

Close the safety guard and side doors.

Jog the printer to the next position.

Repeat the steps above, starting with ‘fill the ink cup’, until all cliche and ink cup assemblies required for the job have been installed.

Adjusting Position of the Image

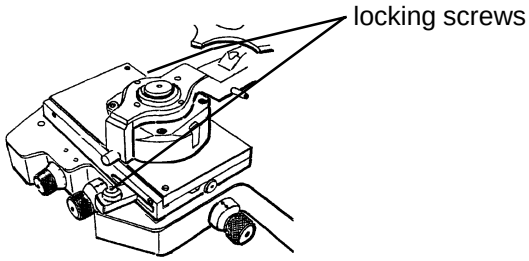

To adjust the position of the cliche holder (resulting in positioning of the image on the part), first loosen the two holder locking screws to the point of being snug but loose enough that the adjusting screws can still move the holder.

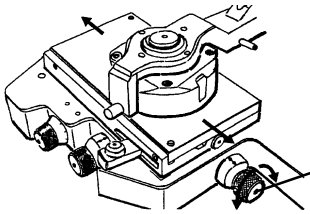

Rotating this adjusting screw will move the cliche in a straight line resulting in a front to back adjustment on the part.

Note: Rotating one division mark on the adjusting screw equals 0.05 mm (0.002”) movement of the image.

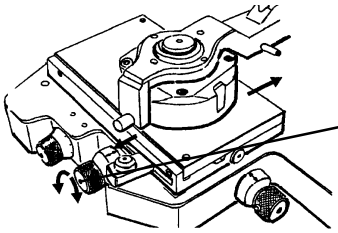

Rotating this adjusting screw will move the cliche in a straight line resulting in a sideways adjustment on the part.

Note: Rotating one division mark on the adjusting screw equals 0.05 mm (0.002”) movement of the image.

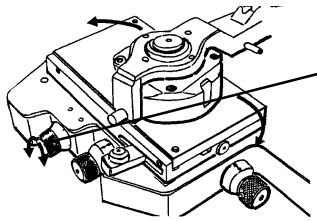

Rotating this adjusting screw will move the cliche around the center of the image

Note: Rotating one division mark on the adjusting screw equals 0.05° movement of the image.

Make adjustments in the same direction whenever possible. If it is necessary to change direction, turn past the required point and then adjust in the original direction. Tighten the lock screws after adjusting.

! Tighten the holder lock screws prior to operating the machine.

Removing Ink Cup and Cliche Assembly

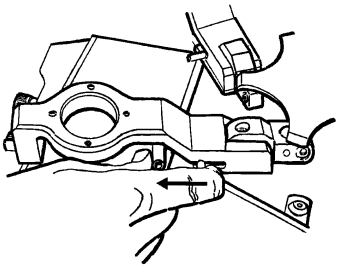

Slide locking pin out from center of cliche carousel and lift driving arm to vertical position.

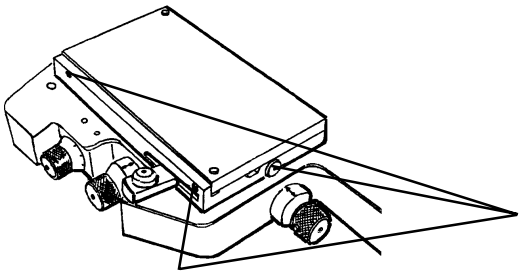

Loosen three (3) cliche locking screws.

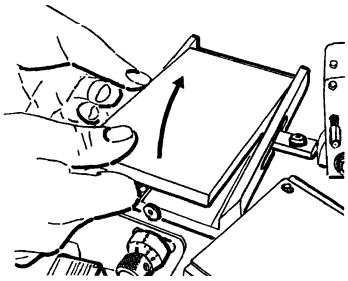

Lift ink cup and cliche assembly from cliche holder as shown. If required, a small pry bar may be inserted into the provided notch to assist in breaking the cliche free.
Turn the ink cup and cliche assembly over, placing the cliche on top.

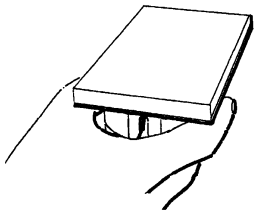

Slide the cliche from the ink cup as shown. The sliding action will strip the remaining ink from the cliche. Clean the ink cup and cliche using approved solvents and protect unfinished parts with a rust preventative.

The ink cup should be handled and stored in a manner that will protect the doctoring edge from damage. Use the original shipping container or assemble the ink cup to the cliche for storing after cleaning.

Handling of the Ink Cup

- Always protect the doctor from being damaged.

WARNING

The doctor ring has a very sharp edge that may cause personal injury if improperly handled.
PLEASE HANDLE WITH CAUTION!

Assembling and Adjusting the Pad

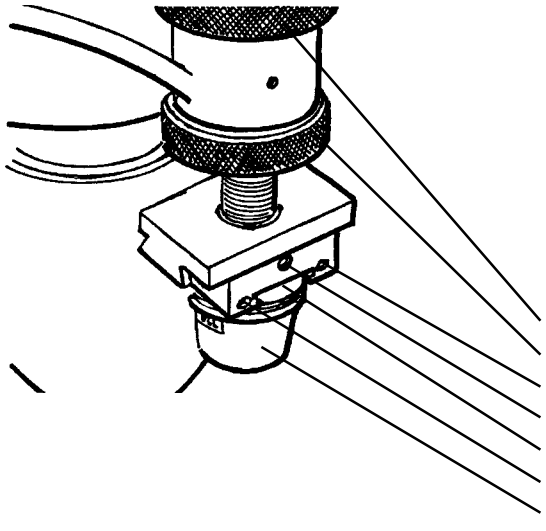

The pad is secured to the pad coupler using appropriate flat head screws. The pad coupler is assembled to the adjusting slide and locked with locking screws. The height of the pad can be adjusted by loosening the locking ring and rotating the adjustment ring. The height of the pad should be positioned so the image on the cliche is just covered when the pad is fully compressed. Turn the adjustment ring clockwise to raise the pad and counterclockwise to lower the pad. Tighten the locking ring after completing adjustment.

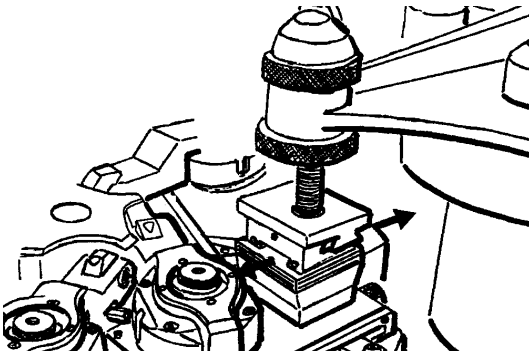

The center of the pad should normally be positioned near the center of the image, but not directly over a part of the image that will be printed (try to position over a blank spot). The position of the pad can be adjusted by loosening the pad adjustment locking screws and sliding the pad to the desired position. Tighten the locking screws after completing the adjustment.

! It is recommended that each pad is installed and adjusted individually to avoid possible collisions with the part or cliche.

Adjusting the Workpiece Table

The workpiece holding fixture should be attached to the table using suitable fasteners. The height of the holding fixture is adjusted using the table height adjusting crank. Adjust the height of the fixture until the pad, at the lowest point in the printing stroke, is compressed just enough on the workpiece to transfer the entire image . Turn the crankhandle clockwise to raise the table and counterclockwise to lower. Be sure to lock the table after making adjustments.

Guideline for Operating the Printer

Following is a general guideline for setting up and operating your Carousel 80 pad printing machine. Your application may require a different procedure. Please contact your Trans Tech representative to arrange specific training.

1. Check general condition of machine and ensure proper operation of safety guard and side doors. Repair or replace any components found to be defective.
2. Prepare and install the ink cups and cliches (see page14).
3. Mount suitable workpiece holding fixture to table and adjust the height (see page 18).
4. Install and adjust pads (see page 18).
5. Load a part into the holding fixture.
6. Select the desired functions from the Set Up Menu (see pages 9 - 10). Select manual mode (see page 10) and print the first station by pressing and holding the jog forward key. If the print is not in the correct location on the part, adjust the position of the fixture on the table and print the first position again. Repeat this process until the first print is located correctly.
7. On a fresh part, print the first and second station. Correct the location of the print from the second station by adjusting the cliche positioning screws (see page 16). Repeat this process until the second print is located correctly.
8. Repeat step (7) to adjust the location of the print in the remaining stations.
9. Select SINGLE CYCLE mode and run a complete print cycle by pressing the Start button or the foot pedal. Verify the set-up of the individual positions. Make any necessary corrections following the procedure described above.
10. Select any required additional functions (e.g. PAD CLEANING, BATCH COUNT) (see page 10).
11. Select SINGLE or CONTINUOUS CYCLE and press the Start button or foot pedal to begin printing (see pages 11 - 12).

Technical Information

Machine Specifications

Single Cycle	Yes
Multiple Cycles	Yes, 2,3,4,5
Continuous Cycle	Yes
Parts Counter	Up-count 6 Digit / Reset
Machine Cycle Rate Indicator	Parts/Min
Infinitely Variable Speed	Yes
Ink Cup Diameter	70 mm
Maximum Print Diameter	60 mm
Cliché Size	90 X 165 mm
Cycles per Hour	720 in five color continuous mode
Pad Pressure	220 Pounds of Force max.
Pad Stroke	80 mm
Drive	Electro-mechanical
Power	230VAC, 1∅, 2A
Control Voltage	24VDC
Control System	Programmable LOGIC Controller • 24VDC • Programmable via PC
Machine Weight	1440 lbs.

Machine Dimensions

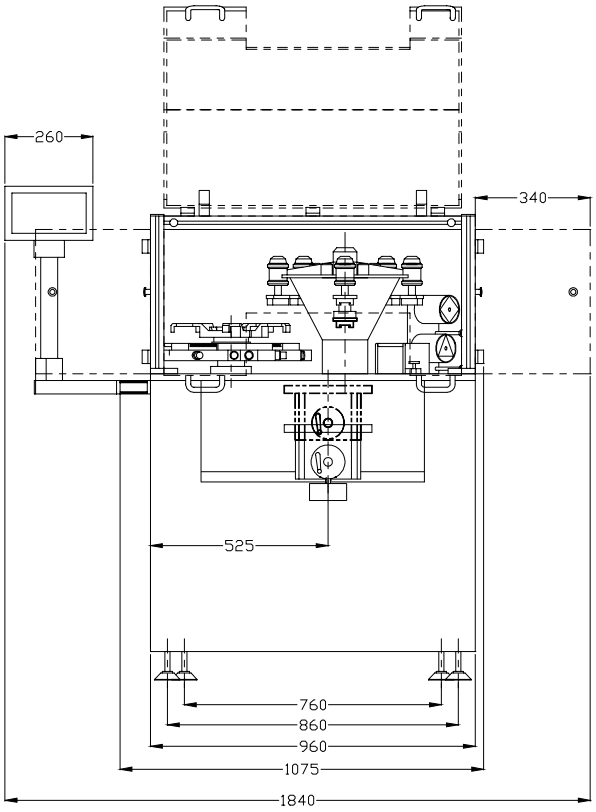

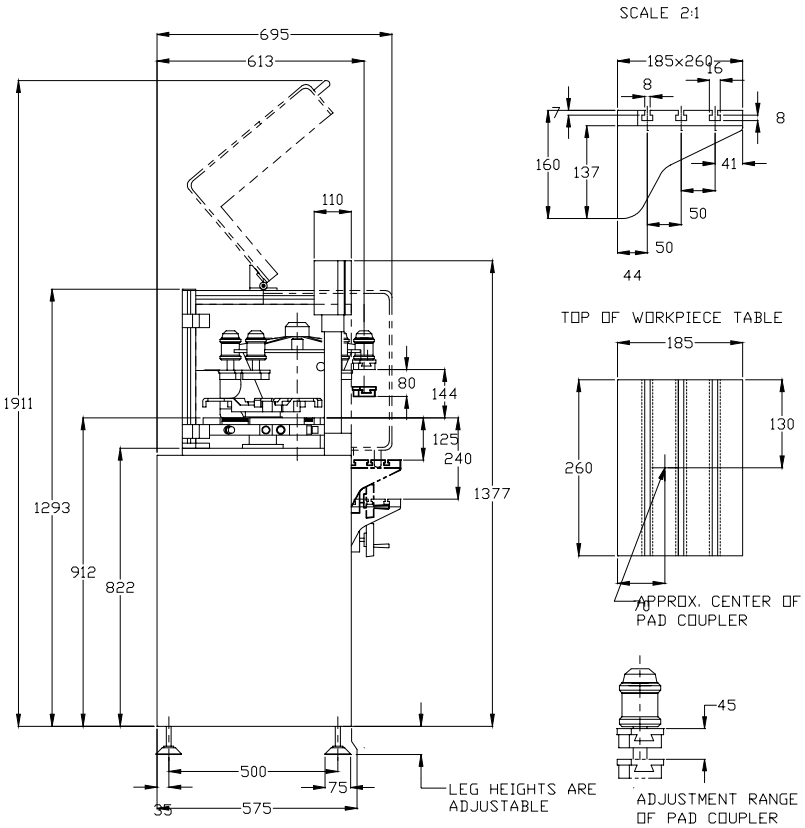

Maintenance

General Information

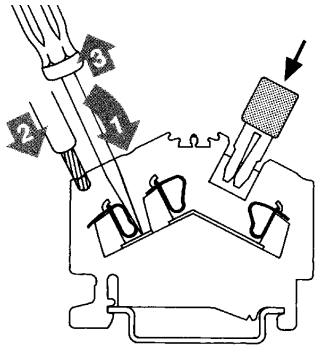

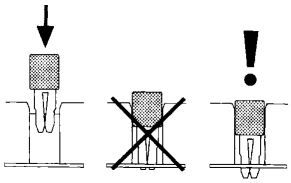

Wire Termination

The machine is equipped with screwless wire terminals. When connecting or disconnecting wires, please follow the illustrated instructions above.

Switch Timing

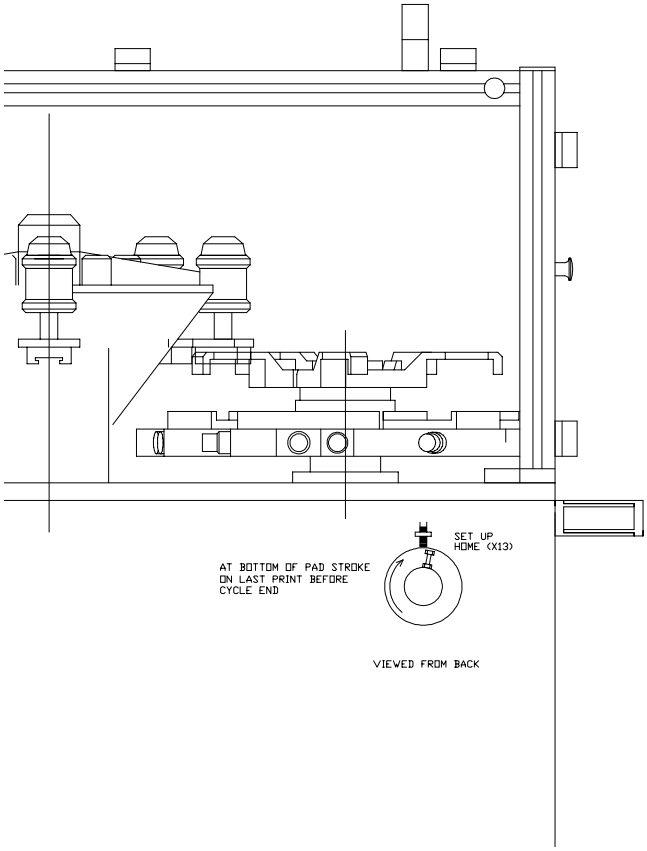

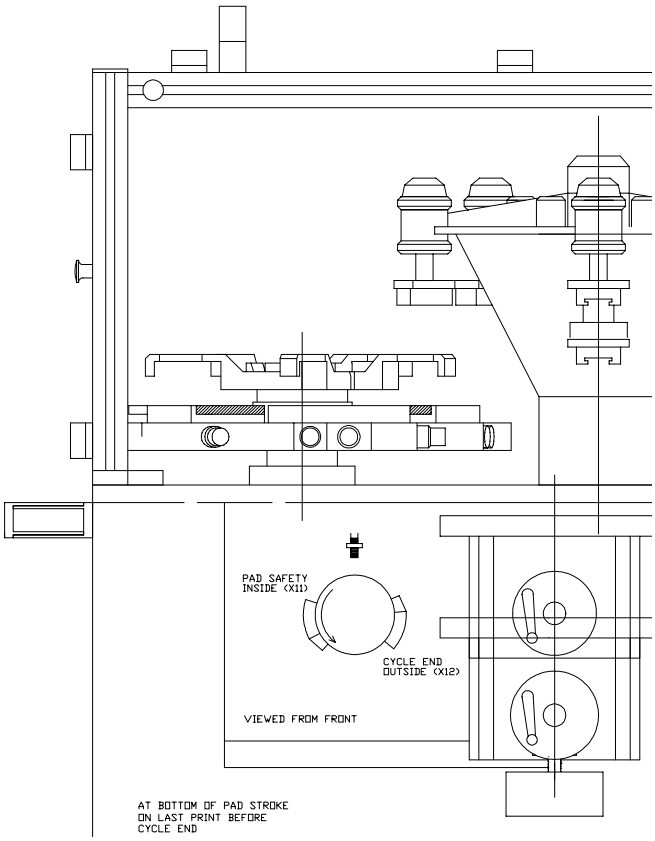

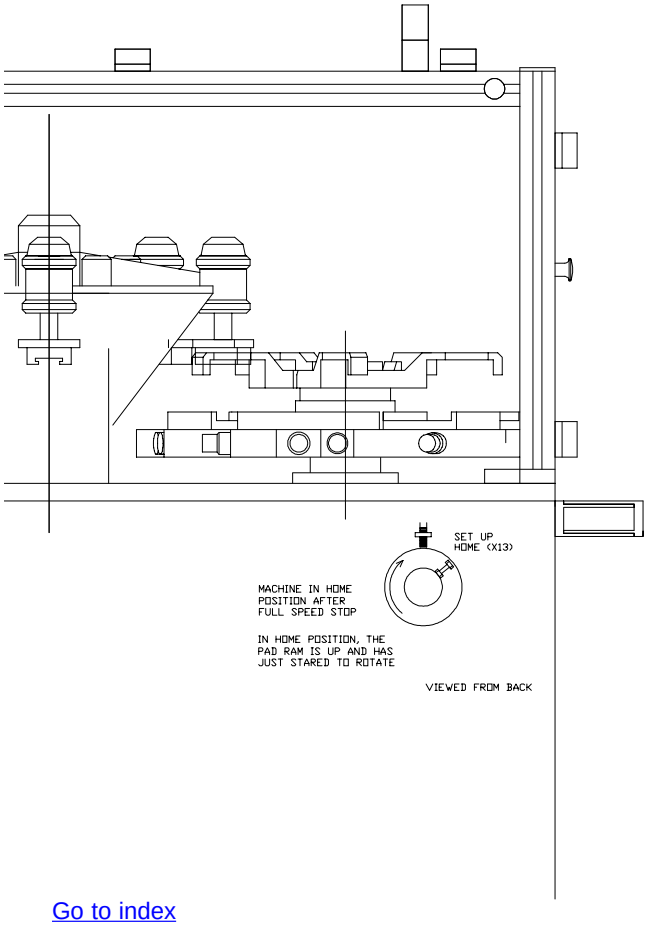

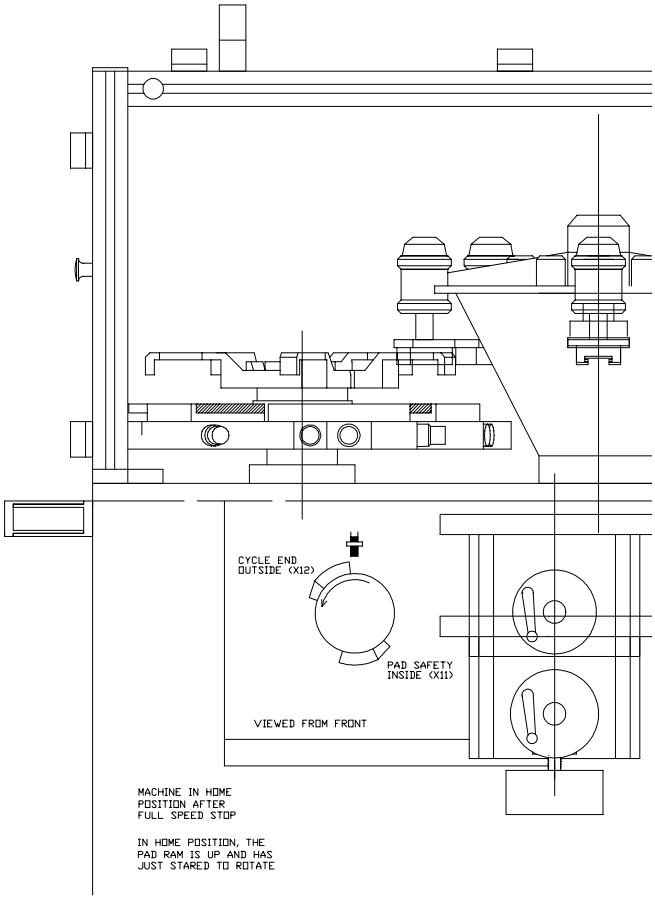

Preventative Maintenance Schedule

Description	Maintenance required:	Frequency
Doctor cup	Inspect doctor ring for damage · Minor nicks or scratches on the ring can be corrected by re-lapping the cup. If major damage (chipping) has occurred, the cup body should be replaced.	Every 8 hours of operation.
Safety Guards	Test for proper function · When the guard is raised or the side door is opened, the machine should stop immediately. · The Stop button indicator lamp should flash.	Every 8 hours of operation.
E-Stop	Test for proper operation · When the E-Stop button is pressed, the machine should stop immediately. · The Stop button indicator lamp should flash. · All machine functions are disabled.	Every 8 hours of operation.
Controls	Test for proper functions · Test all buttons for proper machine functions. · Adjust speed control through full range and check for continuous speed adjustment.	Every 8 hours of operation
Drive motor gearbox	Inspect for leaks · Find cause of leak and repair as required.	Every 50 hours of operation
Indexer gearbox	Inspect for leaks · Find cause and repair as required. Check oil level · Fill to level indicated on sight glass.	Every 50 hours of operation Every 2000 hours of operation
Cliche Table	Clean table of all ink and other residue. · Ink build up in the area of the cliche table may lead to excessive friction and premature failure. · Ink build up in the cliche area may lead to improper seating of the cliche upon cliche change. · Dried ink between the cliche table and cliche holders will prevent adjustment of the cliche position. Forcing adjusting screws will cause pemanent damage to adjustment mechanism.	Every 8 hours of operation
Cam followers for cup drive	Inspect cam followers for smooth rolling action. · While the machine is running and rollers are clean, all rollers should roll with the machine motion. · Erractic or no motion may indicate a damaged or dirty cam follower. Clean or replace. Lubricate cam track.	Every 50 hours of operation
Pad carousel guide bearings	Add grease via grease fittings.	Every 3000 hours
Push rod for pad stroke	· Clean dried grease and dust from push rod (top and bottom). · Brush grease on rod.	Every 200 hours
Cam drive for pad stroke	· Lubricate between cam roller and cam. · Grease cam roller.	Every 50 hours Every 3000 hours
Gears	· Verify proper operation of lubricator. · Replace grease cartridge.	Every 50 hours Every 3 months

Go to index

Preventative Maintenance Schedule (continued)

Description	Maintenance required:	Frequency
Proximity switches	Check for proper adjustment. · The switch should be positioned to obtain a 1mm gap between the end of the switch and the actuating cam.	Every 1000 hours of operation
Motor brake	Check for proper adjustment and operation. · When actuated, there should be a 0.5 - 0.75mm gap between the brake disk and coil plate.	Every 1000 hours of operation

Lubrication Schedule

First Change or Application	Consecutive Changes or Applications	Recommended Lubricant Manufacturer:	Brand name: (or equivalent)
Motor gear box: The gear box is filled at the factory and sealed. Additional lubrication is not required.			
Indexer gear box: The gear box is filled with synthetic oil to the level indicated on the site glass.			
Oil change not required. If oil needs to be added, use:		Kluber	Syntheso D460EP
Cam followers - cup drive: The cam followers are permanently lubricated at the factory and sealed. Additional lubrication is not required.			
Cam track - cup drive: Brush grease into cam track.			
50 hr. of operation	50 hr. of operation	Mobil Oil Corp.	Mobilux EP2
Pad carousel guides: The guide bearings are lubricated via the grease fittings.			
3000 hr. of operation	3000 hr. of operation	Trans Tech	Part # 11400016
Push rod for pad stroke: Brush grease on shaft at bushings.			
200 hr. of operation	200 hr. of operation	Mobil Oil Corp.	Mobilux EP2
Cam drive - pad stroke: The cam roller is lubricated via grease fitting.			
3000 hr. of operation	3000 hr. of operation	Trans Tech	Part # 11400016
Cam drive - pad stroke: Brush grease on perimeter face of cam.			
50 hr. of operation	50 hr. of operation	Mobil Oil Corp.	Mobilux EP2
Grease cartridge - gear lubrication: Change the grease cartridge.			
3 mo. of operation	3 mo. of operation	Trans Tech	Part # 30100434

Machine Alarm Messages and Troubleshooting Guide

Fault Message	Possible Cause	Recommended Action
UNLOCK EMERGENCY OFF	The Emergency Stop switch is pressed. The emergency stop circuit is interrupted.	· Unlock the Emergency Stop switch. · Check the emergency stop circuit for open line.
GUARD CLOSED?	The guard door has to be closed for the machine to operate.	· Check guard doors
FREQUENCY INVERTER FAULT	A frequency inverter fault has occurred.	· Turn Main Disconnect OFF and then ON to reset the inverter. If problem persists, contact Trans Tech service for assistance.
Symptom	**Possible Cause**	**Recommended Action**
No pad delay	Pad delay option not selected or delay time set to zero. Proximity switch X11 defective.	· See Setup Menu - page 9 · Check for proper gap (1 mm) between switch and cam - adjust if needed. · Check wire connections at terminal blocks - repair as needed. · Replace defective switch or cable.
No stop at end of cycle	Proximity switch X12 defective. Proximity switch X13 defective.	· Check for proper gap (1 mm) between switch and cam - adjust if needed. · Check wire connections at terminal blocks - repair as needed. · Replace defective switch or cable.
No display or lights	Main disconnect off. Main circuit breaker tripped. Power supply fuses blown.	· Switch main disconnect on. · Reset circuit breaker CB1. · Check fuses F1, F2 or 4A fuse in PS1.
Part counter not counting - 'automation run' signal not being sent.	Proximity switches not set properly. Automation not enabled.	· Check for proper gap (1 mm) between switch and cam - adjust if needed. · Adjust timing of cams. (see page 23) · Enable Automation in Setup Menu See Setup Menu - page 9

Electrical Schematics

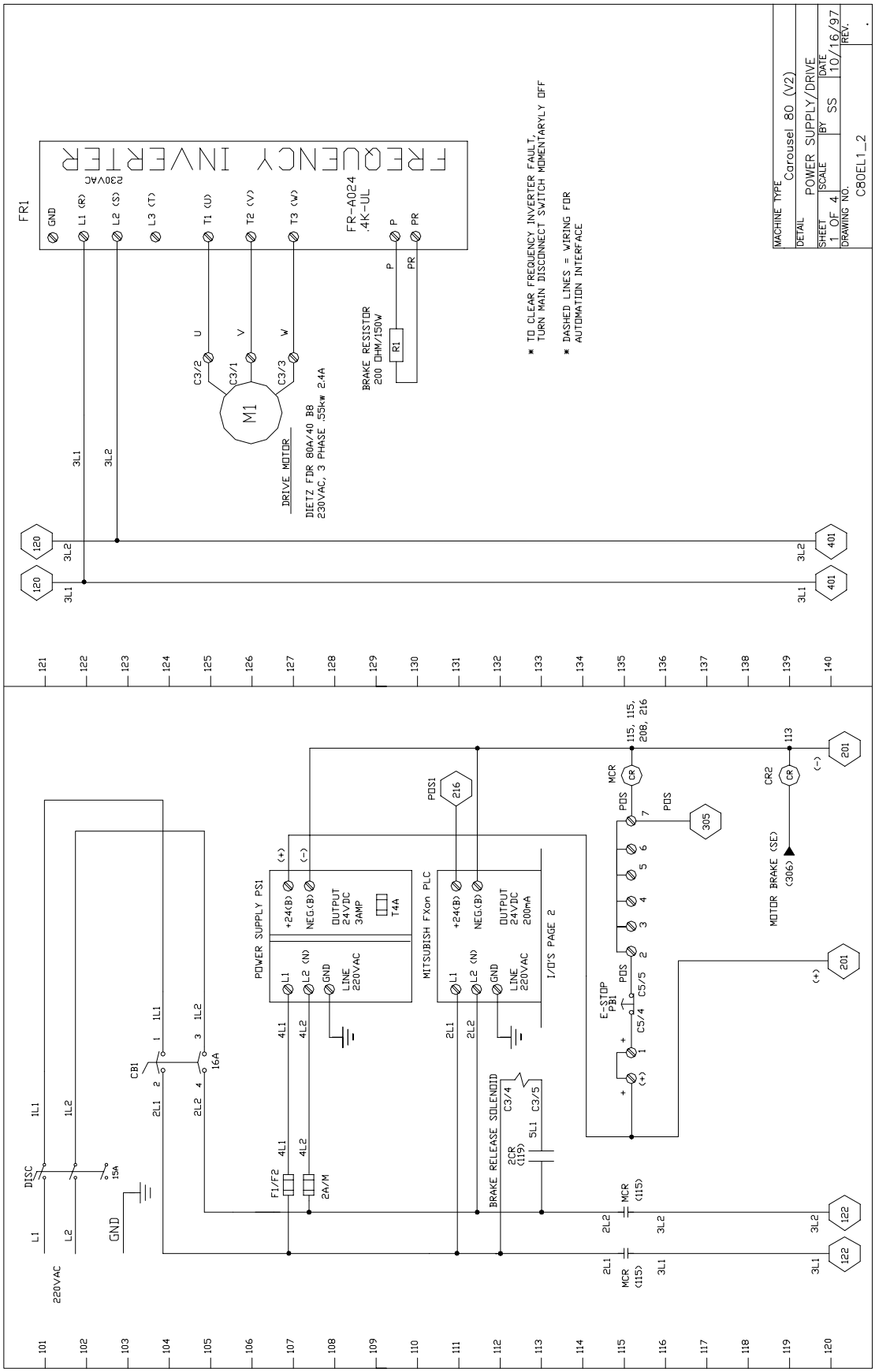

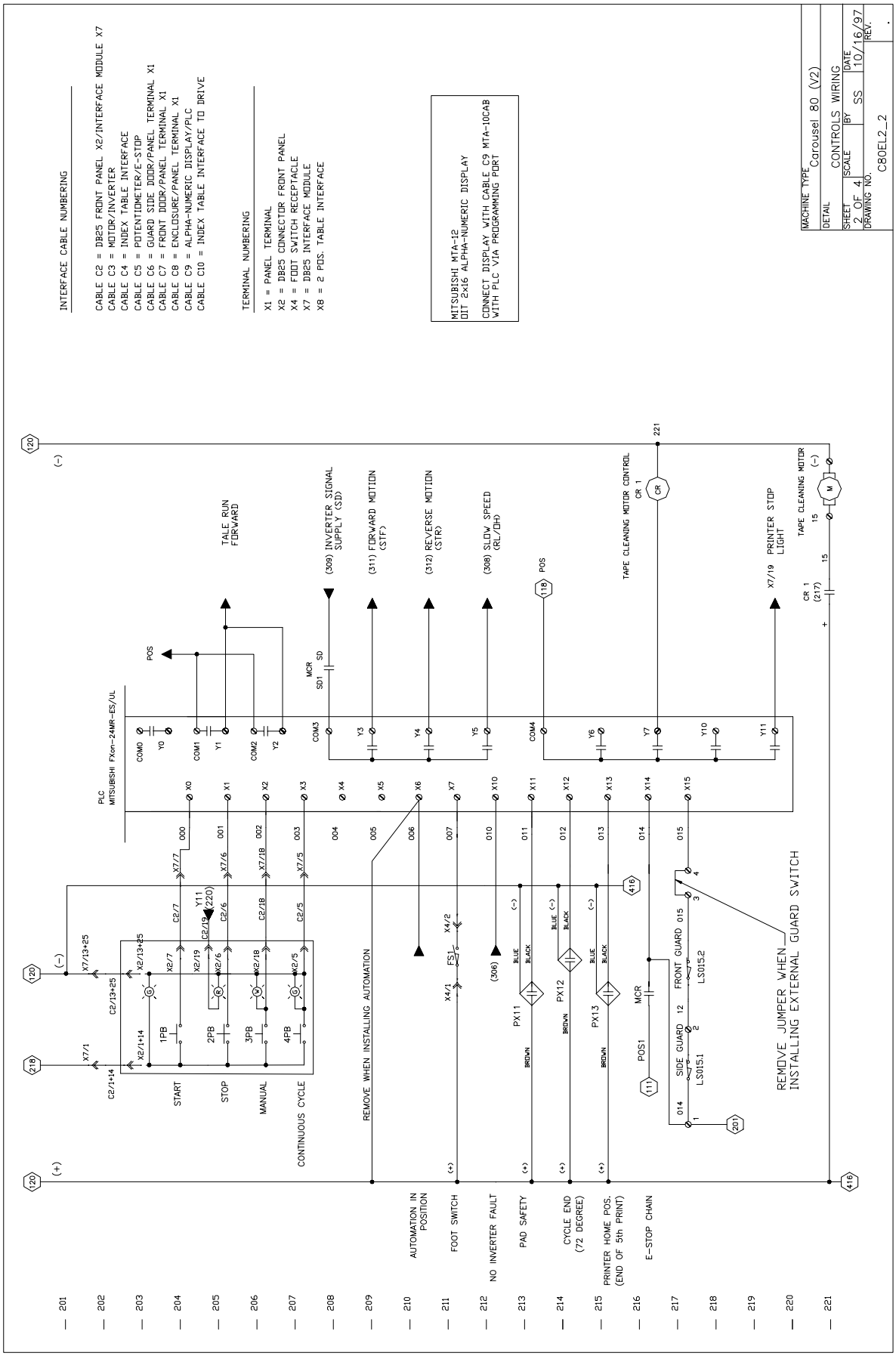
INTERFACE CABLE NUMBERING
CABLE C2 = DB25 FRONT PANEL X2/INTERFACE MODULE X7
CABLE C3 = MOTOR/INVERTER
CABLE C4 = INDEX TABLE INTERFACE
CABLE C5 = POTENTIOMETER/E-STOP
CABLE C6 = GUARD SIDE DOOR/PANEL TERMINAL X1
CABLE C7 = FRONT DOOR/PANEL TERMINAL X1
CABLE C8 = ENCLOSURE/PANEL TERMINAL X1
CABLE C9 = ALPHA-NUMERIC DISPLAY/PLC
CABLE C10 = INDEX TABLE INTERFACE TO DRIVE
TERMINAL NUMBERING
X1 = PANEL TERMINAL
X2 = DB25 CONNECTOR FRONT PANEL
X4 = FOOT SWITCH RECEPTACLE
X7 = DB25 INTERFACE MODULE
X8 = 2 PDS. TABLE INTERFACE
MITSUBISHI MTA-12
DIT 2x16 ALPHA-NUMERIC DISPLAY
CONNECT DISPLAY WITH CABLE C9 MTA-10CAB
WITH PLC V1A PROGRAMMING PORT
MACHINE TYPE Carousel 80 (V2)
DETAIL CONTROLS WIRING
SHEET 2 OF 4
SCALE
BY SS
DATE 10/16/97
DRAWING NO. C80EL2_2
REV.
PLC
MITSUBISHI FXon-24MR-ES/UL
START
STOP
MANUAL
CONTINUOUS CYCLE
TALE RUN FORWARD
(309) INVERTER SIGNAL SUPPLY (SD)
(311) FORWARD MOTION (STF)
(312) REVERSE MOTION (STR)
(308) SLOW SPEED (RL/DH)
TAPE CLEANING MOTOR CONTROL
PRINTER STOP LIGHT
TAPE CLEANING MOTOR
REMOVE WHEN INSTALLING AUTOMATION
REMOVE JUMPER WHEN INSTALLING EXTERNAL GUARD SWITCH
AUTOMATION IN POSITION
FOOT SWITCH
NO INVERTER FAULT
PAD SAFETY
CYCLE END (72 DEGREE)
PRINTER HOME POS. (END OF 5th PRINT)
E-STOP CHAIN

Go to index

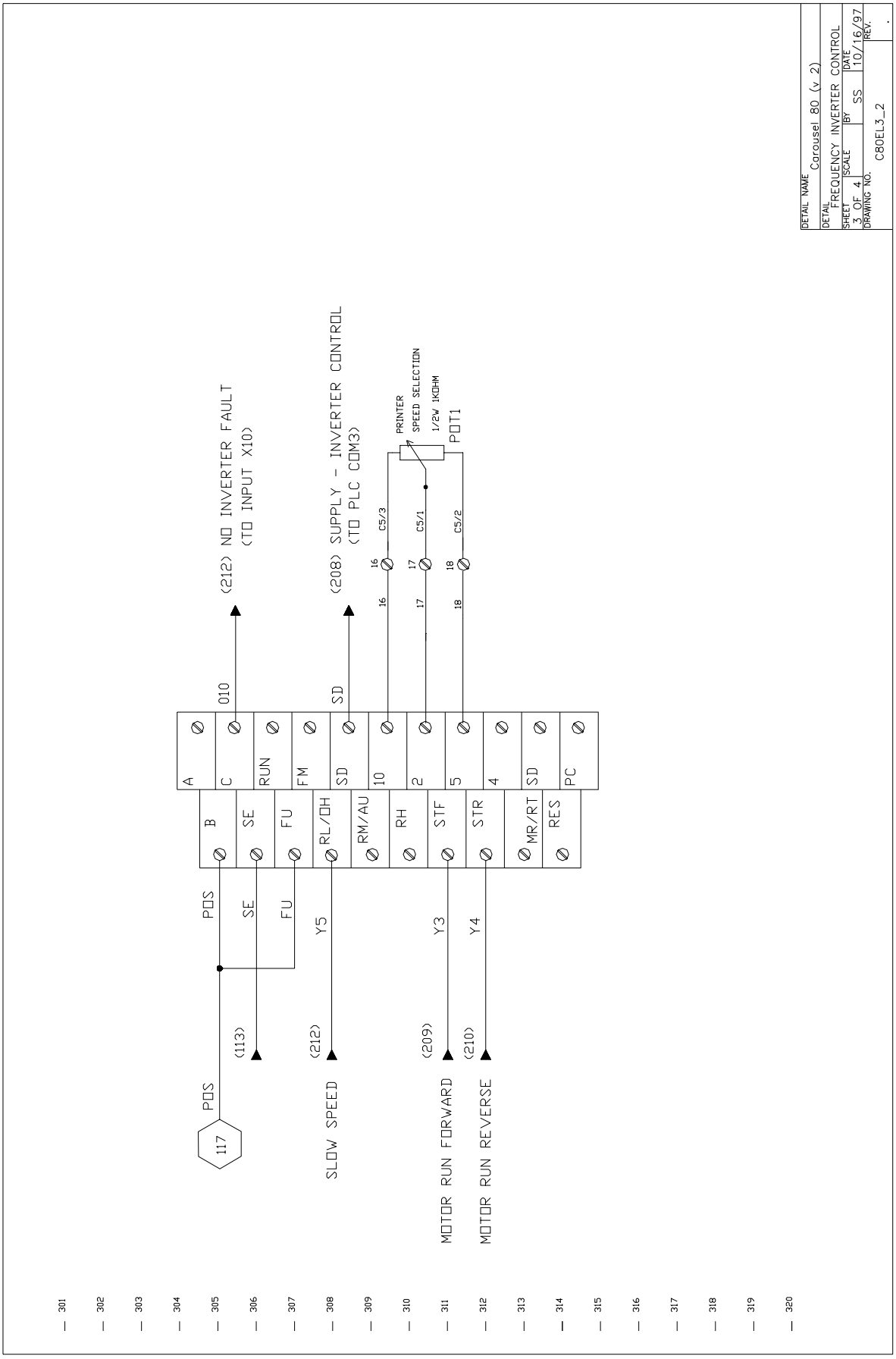
DETAIL NAME Carousel 80 (v 2)
DETAIL FREQUENCY INVERTER CONTROL
SHEET 3 OF 4
SCALE
BY SS
DATE 10/16/97
REV.
DRAWING NO. C80EL3_2
(212) NO INVERTER FAULT
(TO INPUT X10)
(208) SUPPLY - INVERTER CONTROL
(TO PLC COM3)
PRINTER
SPEED SELECTION
1/2W 1KOHM
POT1
C5/3
C5/1
C5/2
010
SD
A
C
RUN
FM
SD
10
2
5
4
SD
PC
B
SE
FU
RL/OH
RM/AU
RH
STF
STR
MR/RT
RES
POS
SE
FU
Y5
Y3
Y4
(113)
(212)
(209)
(210)
POS
117
SLOW SPEED
MOTOR RUN FORWARD
MOTOR RUN REVERSE

Optional Index Table

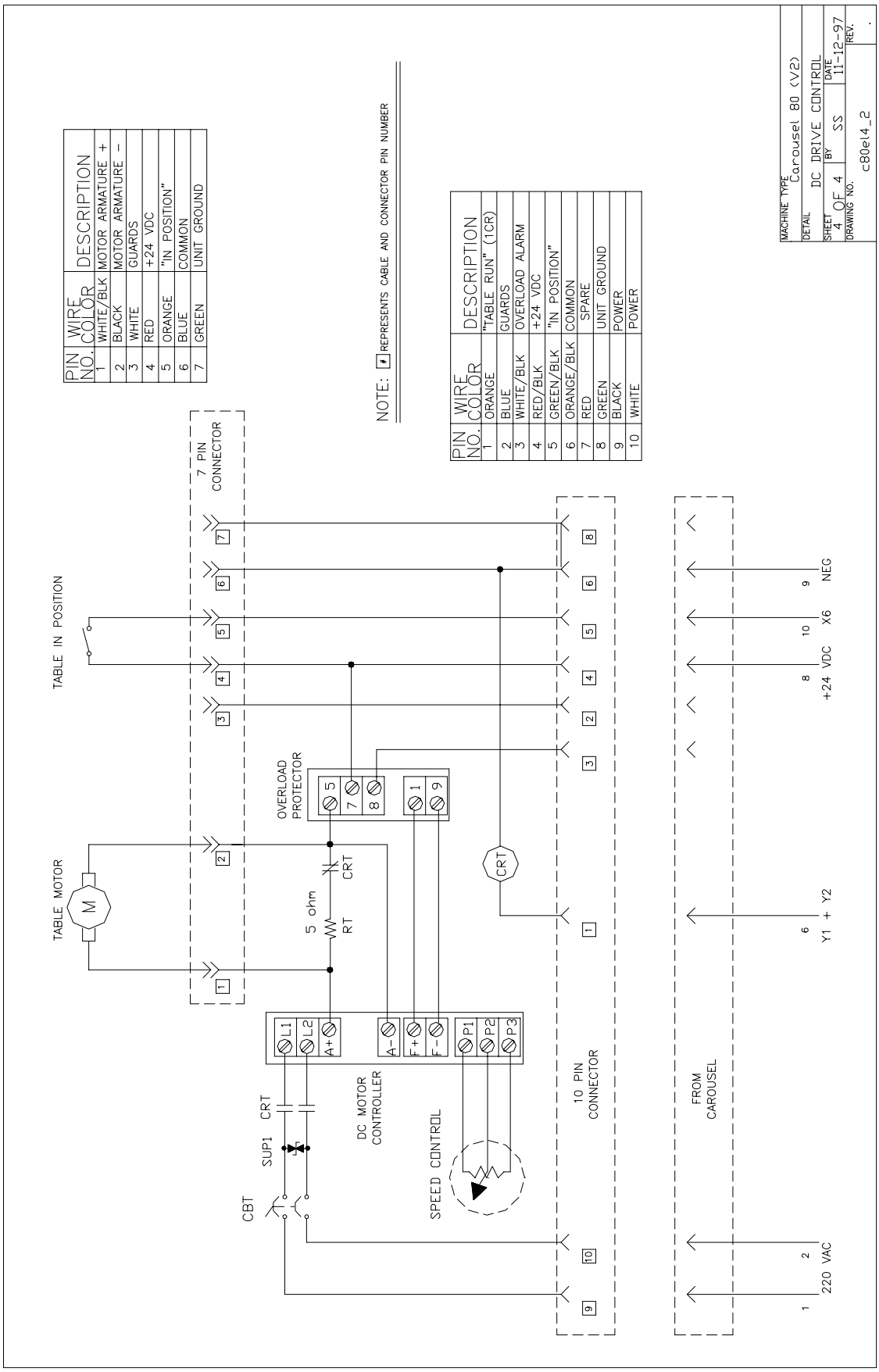

Go to index

Index

2+2 INDEX 9, 13
2+3 INDEX 9, 13
5th color station 13

A

Adjusting Position of the Image 16
Adjusting the Pad 18
Adjusting the Workpiece Table 18
Alarm Messages 26
Automatic Operation 11, 12, 13
Automation 9, 10
Automation run 11

B

Batch Counter 10, 12

C

Cautions 4
Connecting to power 5
Continuous Cycle 7, 12
Continuous Cycle / Setup button 6
Controller display window 6
Cursor Control 6, 8
Cursor Down 8
Cursor Left 8
Cursor Right 8
Cursor Up 8
Cycle Speed Control 6, 8
Cycle Start button 6
Cycle Stop button 6

D

Decrease value 8
Default Display 9

E

Electrical Schematics 27
Emergency Stop Button 6, 8

F

Foot Switch 8

G

General Information 22
Guideline for Operating the Printer 19

H

Handling of the ink cup 14, 17
Humidity 5

I

Increase value 8
Increase/Decrease Value 6, 8
Installation Instructions 5
Installing the Ink Cup and Cliche 15

J

Jog Automation 8, 10
Jog Forward 8, 10
Jog Index Table 8
Jog Keypad 8
Jog Reverse 8, 10

L

Leveling the Machine 5
Liability 4
Lubrication Schedule 25

M

Machine Alarm Messages 26
Machine Dimensions 21
Machine Specifications 20
Maintenance 22
Manual Jog 6
Manual Jog Keypad 6
Manual Mode 7, 10
Manual Mode / Setup button 6
Manual Operation 10
Multi - print 11

N

Number of Prints 9

O

Operating Controls 7, 8
Options ON/OFF 6, 8

P

Pad Clean 10
Pad cleaning advance time 10
Pad Delay 9, 13
Preparing the Ink Cup and Cliche 14
Preventative Maintenance Schedule 24, 25
Printing Operation 14
Production Rate 12

R

Removing Ink Cup and Cliche Assembly 17
Reset the Batch Count 12
Run to clean 10

S

Safety 4
Select OFF 8
Select ON 8
Selecting the Location 5
Setup 7
Setup Menu 7, 9, 10
Single Cycle 11
Single Print 11
Start Machine Cycle 7
Stop Machine Cycle 7
Switch Timing 23
Symbols 4

T

Technical Information 20
Temperature 5
Total Cycle Counter 10
Troubleshooting Guide 26

W

Warnings 4