Sealcup 90 (Release 4)

Operator's Manual

Trans Tech: Complete Pad Printing Solutions

TRANS TECH AMERICA Inc. • *An ITW Decorating Company* • 475 North Gary Avenue • Carol Stream, IL 60188-4900
Phone: 630.752.4000 • **Fax:** 630.752.4489 • **Web Site:** www.itwtranstech.com

For best results when printing this file, set printer resolution to 300 dpi.

This manual valid for machines #279 and above.

While every effort has been made to ensure the accuracy of this manual, Trans Tech cannot be held responsible for any errors or omissions. We reserve the right to make changes to technical specifications without prior notice.

Trans Tech America, Inc. *An Illinois Tool Works Company* • 475 North Gary Avenue • Carol Stream, IL 60188-4900
Phone: (630) 752-4000

Contents

Safety 4
Symbols and their Interpretations 4
Liability 4
General Warnings and Cautions 4
Application Restrictions 4
Installation Instructions 5
Warnings and Cautions 5
Selecting the Location Temperature 5
Leveling the Machine 5
Connecting to Power 5
Operation 6
The Operating Controls 7
The Operating Controls (continued) 8
The Setup Menu 9
The Setup Menu (continued) 10
Manual Operation 10
Automatic Operation 11
Special Functions 12
Preparing to Print 13
The Ink Cup and Cliche 14
Handling of the Ink Cup 14
Installing the Ink Cup and Cliche 15
Removal of the Ink Cup and Cliche 16
Technical Information 17
Machine Dimensions 18
Maintenance 19
General Information 19
Belt Tensioning 19
Cam Follower Torque Values 19
Preventative Maintenance Schedule 20
Preventative Maintenance Schedule (continued) 21
Lubrication Schedule 21
Adjustment of the Cliche Slide Limit Stop 22
Adjustment of Cliche Slide Cam Followers 22
Automation Interface 23
Machine Alarm Messages and Troubleshooting Guide 24
Electrical Schematics 25
Index 28

Safety

Symbols and their Interpretations

WARNING: Neglecting a safety instruction identified with the WARNING symbol may lead to personal injury.

CAUTION: Neglecting a safety instruction identified with the CAUTION symbol may lead to property damage.

POINTER: It is strongly recommended to observe instructions identified with a POINTER symbol.

Liability

- In no event will *Trans Tech America* be responsible or liable for indirect or consequential damages resulting from the use of this equipment.
- The information contained in this manual is subject to change due to improvements in design.
- Though this document has been checked for inaccuracies, *Trans Tech America* does not assume responsibility for any errors contained herein.
- This manual is provided as an aid when operating the Sealcup 90 pad printing machine. Prior to operation, it is strongly advised that the user be thoroughly familiar with the Sealcup 90 operating manual.
- *Trans Tech America* is not responsible or liable for any disadvantage occurred for not following the operating instructions.

- All operators must be adequately trained.

General Warnings and Cautions

- Switch off main disconnect switch prior to connecting/disconnecting power.
- Disconnect power prior to opening the electrical enclosure.

- Switch the main disconnect off and disconnect power prior to working on the electrical system.

Application Restrictions

- Any use other than described in this manual may cause damage to the equipment, personal injury or property damage.

Installation Instructions

Warnings and Cautions

The machine operates on 220 volts, single phase AC power.

Switch off main disconnect switch prior to connecting power.
Be alert and verify that safe start-up conditions exist prior to switching on the main disconnect switch.

Apply oil or a thin layer of grease to unprotected ferrous parts to prevent rusting, especially after cleaning with solvents.

Selecting the Location

Choose a well ventilated area away from direct sunlight to install your pad printing machine. The ideal conditions for the inks used in pad printing are approximately 20° C (68° F) and 40 - 60 % humidity. Make sure the machine is positioned away from walls and other obstructions and placed on a flat surface. The guards, operating panel and other machine openings must be accessible. Ensure adequate area for setup tooling and for storage of parts before and after printing.

Leveling the Machine

Before operation, the machine must be leveled. If equipped with a base, the level of the machine is adjusted by four (4) feet, one at each corner.

Level the machine (on base) as follows:
1. Loosen upper jam nuts.
2. Place bubble levels on machine base, one parallel to the long side of the base and another parallel to the short side of the base.
3. Adjust bottom nuts on left front and left rear screws until bubble level on the long side reads level. It may be necessary to ‘follow’ with the right rear to keep machine stable if big adjustments are required.
4. Adjust bottom nuts equally on right and left rear screws until bubble level on the short side reads level.
5. It may be necessary to repeat steps 3 and 4 several times until both levels read level and the weight is evenly distributed on the four feet.
6. Turn the upper jam nuts clockwise to tighten.

Connecting to Power

The machine is equipped with a power cord and supplied with a NEMA 6-15 plug. The machine requires 208 - 240 VAC, 4.5A, single phase power.

Operation

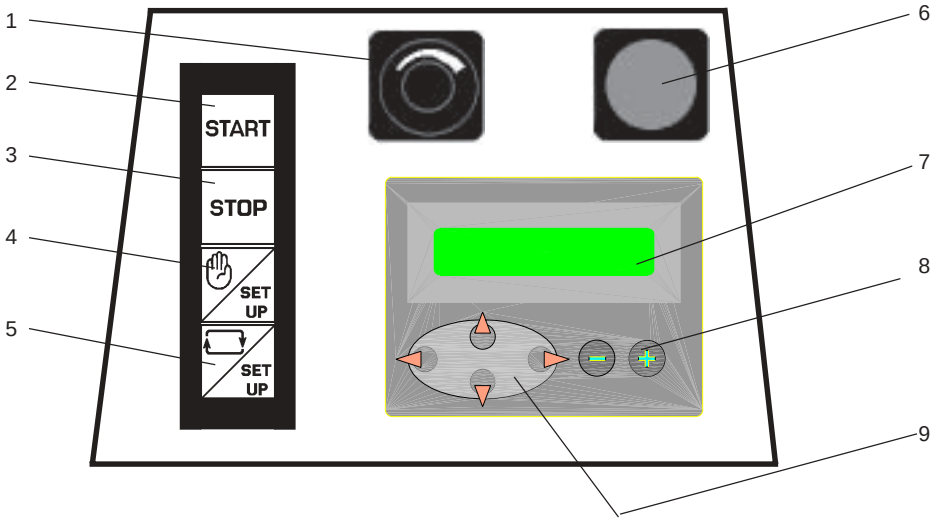

1 Cycle Speed control
2 Cycle Start button
3 Cycle Stop button
4 Manual Mode / Setup button
5 Continuous Cycle / Setup button
6 Emergency Stop button
7 Controller Display Window
8 Options ON/OFF and Increase/Decrease Value Keypad
9 Cursor Control and Manual Jog Keypad

The Operating Controls

The controls are active after main disconnect is turned on and E-Stop is reset. The Start button and Stop button indicator lamps will be illuminated.

Start Machine Cycle (2)

- Press the Start button begin a printing cycle.

Display Production Rate.

- While operating in Continuous Cycle, the current production rate may be viewed by pressing and holding the Start button. Release to return to normal display.

Stop Machine Cycle (3)

- Press the Stop button to initiate a cycle stop. The machine will not stop immediately. It will complete the active print cycle and stop in the home position. The indicator light will illuminate when the machine is in the home position.
- Used in Manual Mode to allow reverse jog to clear a cup jam. (see page 12)

Manual Mode / Setup (4)

Active when the button is in the pressed position (the indicator light is illuminated). When pressed, operation of the machine in Jog Mode is enabled.

- The external automation start pulse is disabled.
- The cycle counter will not count.
- The pad delay is disable.

Used with Continuous Cycle Button to enter the Setup Menu.

Continuous Cycle Mode / Setup (5)

Single Cycle

The button is in the released position (the indicator light is off). When released, the machine will print in Single Cycle Mode.

Continuous Cycle

The button is in the pressed position (the indicator light is illuminated). When pressed, the machine will print in Continuous Cycle Mode.

- The printer speed can be set with the speed control knob on the operating panel.
- The cycle counter is active.
- The pad print delay is enabled.

Used with Manual Mode button to enter the Setup Menu.

&

Setup Menu (4 and 5)

To access the Setup Menu, the Manual Mode / Setup button and the Continuous Cycle / Setup button are in the pressed position (the indicator lights are illuminated). Once active the following parameters can be adjusted.

- ‘NUMBER OF PRINTS’ - sets the number of times the machine will print on one part
- ‘PAD DELAY’ - will pause the cycle after picking up the image but before printing.
- ‘LATER DELAY’ - adjusts the position of the pad delay.
- ‘CYCLE DELAY’ - in continous mode pauses the machine cycle after printing.
- ‘INDEX TABLE’ - an auxillary indexer can be controlled by the machine
- ‘TOTAL COUNT’ - can be reset
- ‘BATCH COUNT’ - used to preset a certain number of parts in a batch.
- ‘CYCLE RATE’.- cycle speed can be displayed.
- ‘BATCH COUNT’- current batch status can be displayed.
- ‘PAD CLEAN’ - allows use of external pad tape-off device, count & stroke are adjustable.
- ‘LANGUAGE’ - displayed language can be switched between Spanish & English.

The Operating Controls (continued)

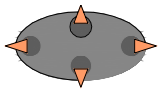

Jog Keypad (9)

· Active when Manual Mode is selected.

Jog Forward

· The printer runs forward while the Jog Forward arrow is pressed.

Jog Reverse

· The printer runs reverse while the Jog Reverse arrow is pressed.

Jog Index Table

· The Index Table indexes once each time the Jog Index Table arrow is pressed.

Cursor Control (9)

· Active when in the Setup Menu.

Cursor Up

· The cursor moves up one line each time the arrow is pressed.

Cursor Down

· The cursor moves down one line each time the arrow is pressed.

Cursor Right

· The cursor moves right one position each time the arrow is pressed.

Cursor Left

· The cursor moves left one position each time the arrow is pressed.

Options ON/OFF and Increase/Decrease Value Keypad (8)

· Active when in the Setup Menu.

Select ON / Increase

· Options are selected ON.

· Variable values are increased. The value is increased one count for each time the button is pressed. If the button is held down, the value will increase by ones, then tens, then hundreds, etc. to the maximum for the option.

Select OFF / Decrease

· Options are selected OFF.

· Variable values are decreased. The value is decreased one count for each time the button is pressed. If the button is held down, the value will decrease by ones, then tens, then hundreds, etc. to the minimum for the option.

Cycle Speed Control (1)

· Active during a printing cycle.

· The cycle speed can be adjusted when operating in the Single Cycle or Continuous Cycle modes. Rotate clockwise to increase speed. Rotate counterclockwise to decrease speed.

Emergency Stop Button (6)

· Turn the button clockwise to release.

· Pressing this button will immediately stop all machine motion. The button must be released and the Start button or the Foot Switch must be pressed to restart the machine (the active print cycle will be completed).

WARNING - The Emergency Stop button does not shut off the power to the machine or in the electrical drawer. Switch off the Main Disconnect Switch and disconnect the power cord before servicing the machine or working in the electrical drawer.

Foot Switch

The Foot Switch is used to:

· to start the machine while in Single Cycle Mode. When started via the Foot Switch, the printer will cycle for the number of hits selected and then stop in the home position.

· to start and stop the machine while in Continuous Cycle Mode. When started via the Foot Switch or Start button, the printer will operate until the Stop button or Foot Switch is pressed. If the Stop button is pressed, the machine will complete the active print cycle and stop in the home position. When a stop is initiated via the Foot Switch, the machine will stop instantly. Press the Foot Switch again to continue the interrupted continuous cycle or press the Start button to complete the active cycle and stop in the home position.

The Setup Menu

To access the Setup Menu, the Manual Mode and Continuous Cycle Buttons must both be in the pressed position. When pressed, the buttons are illuminated and the first two lines of the Setup Menu are displayed. To select or modify a feature or an option, place the cursor on the line to be changed (either line 1 or line 2) and press the Options On or Options Off button. Press the Cursor Up or Cursor Down arrows to scroll through the Setup Menu. (See page 8) To exit the Setup Menu, either the Manual Mode Button, the Continuous Cycle Button or both must be in the released (up) position. The indicator lamp(s) will be off.

SETUP MODE **1 NUMBER OF PRINTS**	Default Display 1 = number of prints selected
SETUP MODE **1 NUMBER OF PRINTS**	The NUMBER OF PRINTS (1,2,3,4) can be preset. · Press the + key to increase the number of hits (max 4 cycles). · Press the − key to decrease the number of hits.
1 NUMBER OF PRINTS **OFF PAD DELAY**	PAD DELAY can be turned ON or OFF. · Press the + key to turn PAD DELAY ON. · Press the − key to turn PAD DELAY OFF.
OFF PAD DELAY **X.X SECONDS**	The PAD DELAY time can be preset from 0.1 to 4.0 seconds. · Press the + key to increase the pad delay time · Press the − key to decrease the pad delay time.
X.X SECONDS **XX LATER DELAY**	The LATER DELAY position can be preset from 0 to 99. · Press the + key to increase the later delay position · Press the − key to decrease the later delay position.
XX LATER DELAY **OFF CYCLE DELAY**	CYCLE DELAY can be turned ON or OFF. · Press the + key to turn CYCLE DELAY ON. · Press the − key to turn CYCLE DELAY OFF.
OFF CYCLE DELAY **X.X SECONDS**	The CYCLE DELAY time can be preset from 0.3 to 9.9 seconds. · Press the + key to increase the cycle delay time · Press the − key to decrease the cycle delay time.
X.X SECONDS **OFF INDEX TABLE**	The INDEX TABLE option can be turned ON or OFF. · Press the + key to turn the index table ON. · Press the − key to turn the index table OFF.
TOTAL COUNT **PRESS + TO RESET**	The TOTAL CYCLE COUNTER can be reset to zero. · Press the + key to reset the TOTAL CYCLE COUNTER.
PRESS + TO RESET **OFF COUNT BATCH**	The BATCH COUNTER can be turned ON or OFF. · Press the + key to turn the BATCH COUNTER ON. · Press the − key to turn the BATCH COUNTER OFF.

The Setup Menu (continued)

OFF COUNT BATCH
XXX10 BATCH

The BATCH COUNTER can be preset from 1 to 99999.
- Press the + key to increase the BATCH COUNT.
- Press the − key to decrease the BATCH COUNT.

XXX10 BATCH
NO DISPLAY RATE

- The display window can be configured to dynamically display the current Production Rate.
- Press the + key to turn RATE display ON.
- Press the − key to turn RATE display OFF.

NO DISPLAY RATE
NO DISPLAY BATCH

- The display window can be configured to dynamically display the current Batch Count value.
- Press the + key to turn BATCH COUNT display ON.
- Press the − key to turn BATCH COUNT display OFF.

NO DISPLAY BATCH
OFF PAD CLEAN

PAD CLEAN can be turned ON or OFF. (PAD CLEAN is optional.)
- Press the + key to turn PAD CLEAN ON.
- Press the − key to turn PAD CLEAN OFF.

OFF PAD CLEAN
XXXXX CLEAN COUNT

The PAD CLEAN COUNT can be preset from 1 to 99999.
- Press the + key to increase the PAD CLEAN COUNT.
- Press the − key to decrease the PAD CLEAN COUNT.

XXXXX CLEAN COUNT
XXXXX CLEAN STROKE

The PAD CLEAN STROKE can be preset from 1 to 50.
- Press the + key to increase the PAD CLEAN STROKE.
- Press the − key to decrease the PAD CLEAN STROKE.

XXXXX CLEAN STROKE
SELECT LANGUAGE

The displayed LANGUAGE can be selected

SELECT LANGUAGE
1 - ENGLISH

The LANGUAGE can be changed from english to spanish.
- Press the + key to select 2 - SPANISH.
- Press the − key to select 1 - ENGLISH..

Manual Operation

SET UP

Manual Mode Button

Before the machine will operate in Manual Mode, the main disconnect switch must be on, E-Stop must be reset, the machine cover and guard door must be closed and the ink cup and cliche must be clamped. The Stop button indicator lamp will be illuminated. To enable Manual Mode, the Manual Mode button must be in the pressed (down) position. The indicator lamp will be illuminated.

Manual Mode Display

TABLE = ^ = JOG
< = REV FWD =
>

The following functions are available when Manual Mode is selected.

▶
- Jog machine forward
  - The printer will run forward while the Jog Forward arrow is pressed and stop immediately when the arrow is released.

▲
- Jog table (Index Table is optional)
  - The index table will complete one index cycle each time the Jog Table arrow is pressed.

◀
- Jog machine reverse
  - The printer will run reverse while the Jog Reverse arrow is pressed and stop immediately when the arrow is released.

The printer runs at a fixed speed when in Manual Mode.

Go to index

Automatic Operation

Before the machine will operate in **Automatic Mode**, the main disconnect switch must be on, E-Stop must be reset, the machine cover and guard door must be closed and the ink cup and cliche must be clamped. The Stop button indicator lamp will be illuminated. To enable Automatic Mode, the Manual Mode button must be in the released (up) position. The indicator lamp will be off.

· If the guard door is opened while the machine is running, the machine will stop immediately. The guard door must be closed before machine operation can resume.
· If a machine or automation error is detected, the machine will stop immediately. The fault is indicated in the Display Window (see *Machine Alarm Messages and Troubleshooting Guide* page 24). The fault condition must be corrected before machine operation can resume.

SET UP

SINGLE CYCLE
TOTAL CNT. 999999

Single Cycle is selected by placing the Continuous Cycle button in the released (up) position (the indicator lamp is off). Press the Start button to begin a single print cycle.
· The machine will stop in the home position after completing the selected number of hits (1-4).
· The external automation start pulse is enabled.
· The cycle counter will count.
· The batch count function will operate if enabled.
· The pad delay will function if enabled.
· The later delay will function if enabled.
· The cycle delay will function if enabled.
· The pad cleaner will operate if installed and enabled.

SET UP

CONTINUOUS CYCLE
TOTAL CNT. 999999

Continuous Cycle is selected by placing the Continuous Cycle button in the pressed (down) position (the indicator lamp is on). Press the Start button to begin continuous print cycles.
· The machine will continuously print until Cycle Stop button or the foot switch is pressed or until the Continuous Cycle button is switched to the released (up) position.
· The total cycle counter and batch counter will increase by 1 at the completion of each print cycle.
· The external automation start pulse is enabled.
· The batch count function will operate if enabled.
· The pad delay will function if enabled.
· The later delay will function if enabled.
· The cycle delay will function if enabled.
· The pad cleaner will operate if installed and enabled.
· If the batch count function is enabled, the machine will cycle until the counter reaches the preset value and stop in the home position at the end of the last print cycle.

ON COUNT BATCH
XXXXX BATCH

Reset the Batch Count
When the batch counter has reached it's preset value, it must be reset before printing can be resumed. To reset the batch counter, the Batch Count function must be turned OFF then turned back ON. Enter the Setup Menu by placing the Manual Mode and Continuous Cycle buttons in the pressed (down) position (see page 9). Scroll to the COUNT BATCH line in the menu and:
· press the + key to turn Batch Count OFF, then
· press the – key to turn Batch Count ON.

Special Functions

START

```
PRODUCTION RATE
PARTS/MIN  XXX
```

During continuous printing, the current **Production Rate** can be temporarily displayed by pressing and holding the Start button. When the button is released, the screen returns to it's previous display.

```
PRODUCTION RATE
PARTS/MIN  XXX
```

If **Display Rate** is set to ON, the display window will dynamically display the current Production Rate.

```
BATCH CNT    XXXXX
COMPLETED    XXXXX
```

If **Display Batch** is set to ON, the display window will show the batch counter preset value and dynamically display the current batch counter value.

WARNING: The following section describes a special error recovery procedure. The normal machine interlocks are bypassed during this procedure, and therefore should only be performed by trained and authorized personnel.

```
GUARD CLOSED?
CUP LOCKED?
```

If the cup becomes jammed, it is possible to jog the machine in the reverse direction while the alarm condition exists (Stop button indicator lamp is blinking).

STOP

&

◀

```
CLEAR CUP JAM
< = JOG REVERSE
```

- Enable Manual Mode (see page 10).
- Press and hold the Stop button.
- Press the Jog Reverse arrow to jog the machine in the reverse direction until the jam can be cleared.

Preparing to Print

Following is a general guideline for setting up and operating your Sealcup 60 pad printing machine. Your application may require a different procedure. Please contact Trans Tech to arrange specific training.

Turn the Main Disconnect Switch to the on position.

- Power is applied to the controls.
- The Start and Stop buttons will illuminate.

If the Emergency Stop button is pressed or a fault condition exists, the Stop button will flash.

- Release the Emergency Stop button (turn clockwise to release) or eliminate the fault condition.
- Power is applied to the controls.
- The Start and Stop buttons will illuminate.

Check the general condition of the machine and ensure proper operation of the safety guard. Repair or replace any components found to be defective.

Prepare and install the ink cup and cliche (see page 15).

Install a suitable pad, if not already installed, and close the safety guard.

Select Manual Mode, press the Jog Forward arrow and verify that the cup is cleaning the cliche and not leaking. To check the doctored image, release the Jog Forward arrow when the cliche is in the extended position.

Jog the machine to pick up an image from the cliche. Adjust the pad up or down as required (by shimming between the pad and pad coupler) until the pad is compressed just enough to pick up the entire image. (see illustration on page 15).

Adjust the height of the part support to compress the pad on the workpiece just enough to release the entire image.

Adjust the position of the part to place the image in the proper location on the workpiece.

Select the desired features and options (see page 9) and ensure that Single Cycle Mode is selected (the Continuous Cycle button is released).

Press the Start button to transfer an image to the workpiece.

Adjust the printing process as required to obtain the desired print quality.

Select Single or Continuous Cylce Mode and press the Start button or Foot Switch to begin production.

The Ink Cup and Cliche

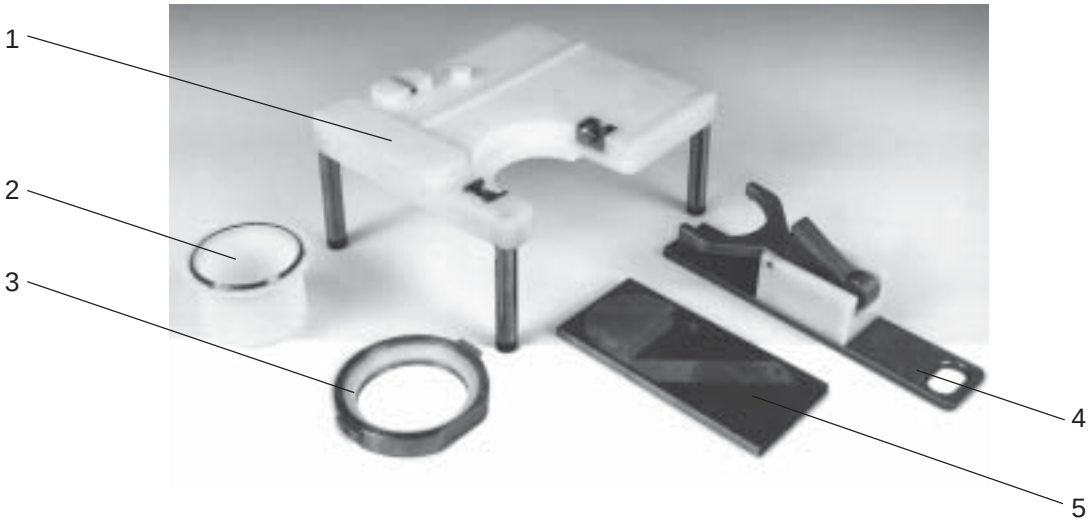

Item	Description	Part Number
1	Setup Table	10911000
2	Ink Cup	10903000
3	Hold Down Ring	10931000
4	Clamping Tool	10921000
5	Cliche	

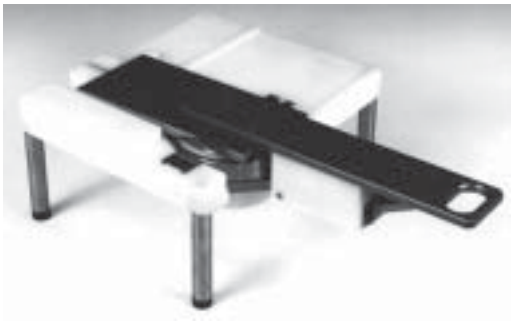

Ink cup assembled on setup table.

Handling of the Ink Cup

!

- Always protect the doctor ring in the ink cup from being damaged
- When not in use, store assembled cup, cliche and clamping tool on the setup table as shown.
- If stored separately, place the ink cup in the protective plastic shipping container.
- Rotate the cup frequently (steel cliche 2 hrs., polymer cliche 1 hr.) while in operation.

WARNING

The doctor ring has a very sharp edge that may cause personal injury if improperly handled.
PLEASE HANDLE WITH CAUTION!

Installing the Ink Cup and Cliche

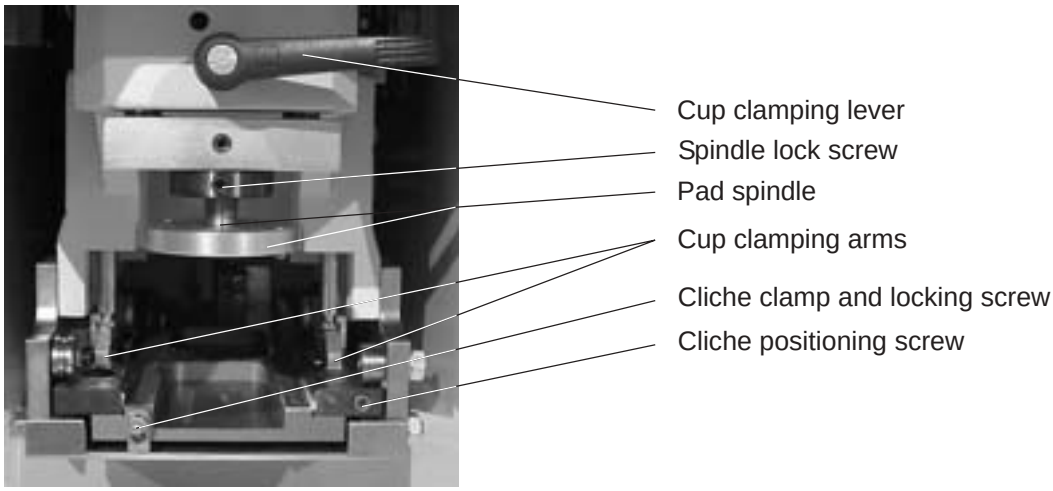

When preparing the ink cup and cliche for printing, proceed as follows:

1. Place the hold down ring, top down (part number towards operator) into the setup table with the pivot blocks engaged in the receiver pockets.
2. Place the ink cup (with the opening up) in the hold down ring.
2. Fill the ink cup with ink to the desired fill level.
3. Set the cliche carefully onto the ink cup with the image facing down and over the ink cup.
4. Slide the cliche back and left until it is located firmly against the back and side stops on the setup table.
5. Place the open clamping tool over the ink cup and cliche assembly with the flat bottom resting on the cliche.
6. Close the clamping tool by turning the clamping lever on the fork to the locked position. The clamping tool must be fully against the cliche and the pins in the fork must be in the holes in the hold down ring.
7. Open the machine guard. Remove the pad, if installed. Verify that the cup clamping arms are up (in the unclamped position). If not, rotate the cup clamping lever clockwise to raise the arms.
8. Lift the ink cup and cliche assembly from the setup table and carefully turn the assembly over (the cliche is now on the bottom).
9. Slide the assembly onto the cliche slide.
10. Close the cup clamping lever to lower the arms and lock the ink cup. Verify that the clamping arms are fully seated on the hold down ring pivot blocks and that pressure is applied to the ink cup.
11. Open the clamping tool and remove.
12. Rotate the cliche clamp.
13. Tighten the cliche locking screw. This will draw the cliche tightly into position.
14. Reinstall pad, if removed.
15. Close machine guard.

See Preparing to Print on page 13.

Removal of the Ink Cup and Cliche

When removing the ink cup and cliche from the machine, proceed as follows:
(see illustration on page 15)

1. Stop the printer via the Stop button.
2. Open the machine guard and remove the pad.
3. Loosen the cliche locking screw and rotate the cliche clamp to clear the cliche.
4. Slide the open clamping tool with the fork upward over the ink cup and cliche. The flat bottom plate should be located under the cliche and the fork should be located on top of the hold down ring.
5. Close the clamping tool by turning the clamping lever on the fork to the locked position. The clamping tool must be fully against the cliche and the pins in the fork must be in the holes in the hold down ring.
6. Turn the cup clamping lever counterclockwise to raise the clamping arms.

If the ink cup and cliche have been in the machine for an extended period of time, accumulation of ink may inhibit the removal of the cliche. This may cause the ink cup to pull free from the cliche and the ink to spill. Verify that the cliche and ink cup slide out together!

7. Draw the ink cup and cliche assembly out of the cliche slide and carefully turn the assembly over (the cliche is now on top).
8. Set assembly into the setup table with the hold down ring pivot blocks engaged in the receiver pockets.
9. Open and remove the clamping tool.
10. Slide the cliche off the ink cup. The ink remaining on the cliche will be stripped off.

If the cup and cliche assembly will be taken out of operation for an extended time, single component ink can remain in the cup without deterioration of the ink.

Technical Information

Single Cycle	Yes
Multiple Hits	Yes 2,3,4
Continuous Cycle	Yes
Parts Counter	Up-count 6 Digit / Reset
Machine Cycle Rate Indicator	Parts/Min
Infinitely Variable Speed	Yes (600 - 3600 cycles per hour)
Ink Cup Diameter	90 mm
Maximum Print Diameter	80 mm
Cliché Size	100 X 215 mm
Cycles per Hour	600 min. (continuous without pad delay)
	3600 max. (continuous without pad delay)
Pad Print Delay	0.1 to 4 sec.
Pad Pressure	240 pounds of force max.
Drive	Electro-mechanical
Power	220VAC, 1∅, 4.5A
Control Voltage	24VDC
Control System	Programmable Logic Controller
Machine Weight (with out base)	315 Lbs.

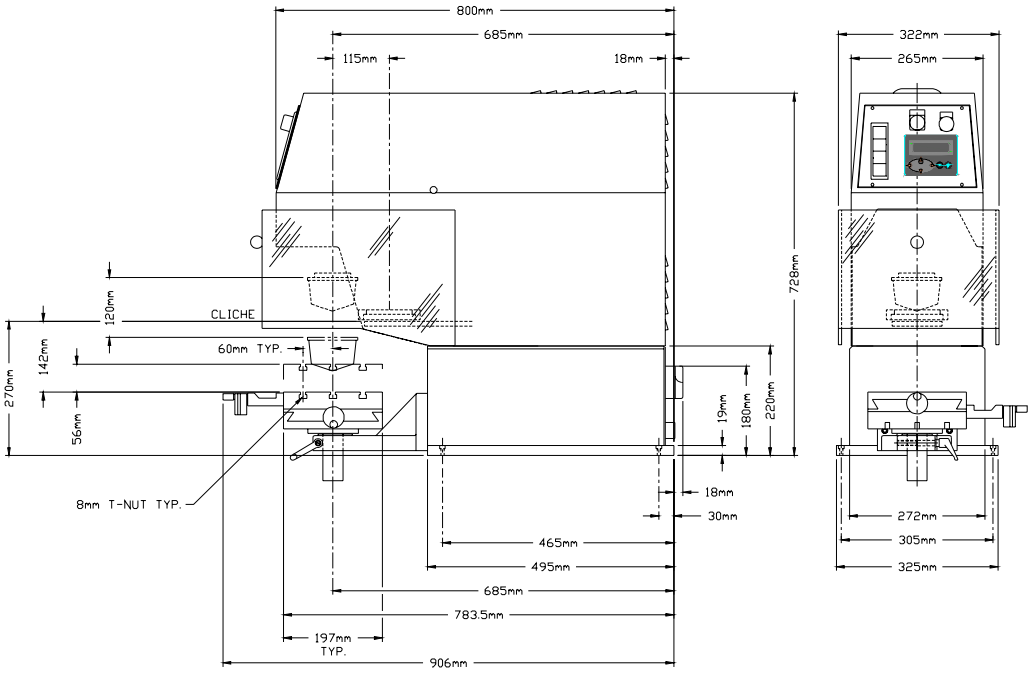
800mm
685mm
115mm
18mm
322mm
265mm
728mm
120mm
CLICHE
60mm TYP.
142mm
270mm
56mm
19mm
180mm
220mm
8mm T-NUT TYP.
18mm
30mm
465mm
495mm
685mm
783.5mm
197mm
TYP.
906mm
272mm
305mm
325mm

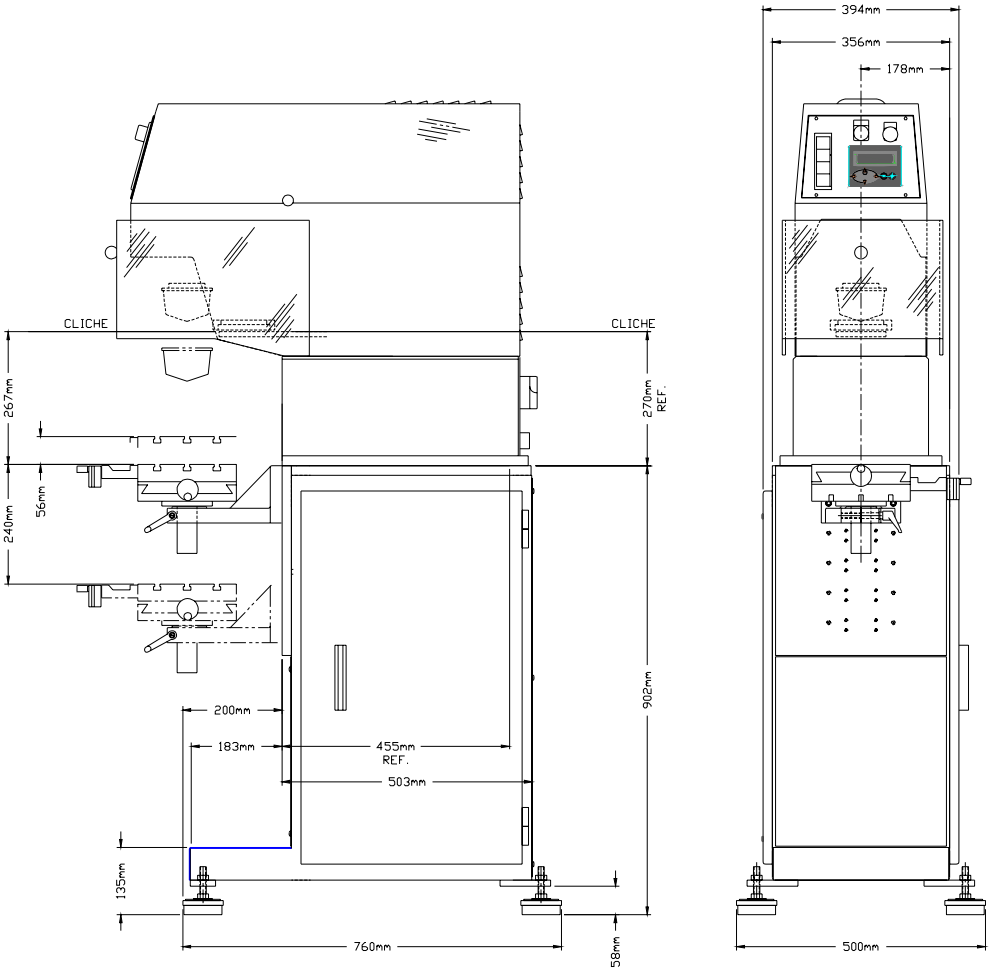
394mm
356mm
178mm
CLICHE
CLICHE
267mm
270mm
REF.
56mm
240mm
902mm
200mm
183mm
455mm
REF.
503mm
135mm
760mm
58mm
500mm

Go to index

Maintenance

General Information

Wire Termination
The machine is equipped with screwless wire terminals. When connecting or disconnecting wires, please reference the illustrated instructions below.

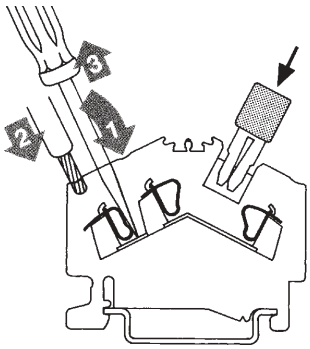

Wire Insertion/removal Diagrams

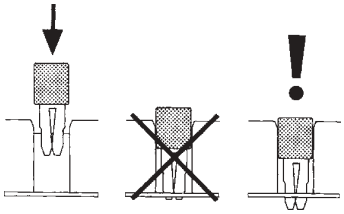

Jumper Insertion Diagram

Belt Tensioning

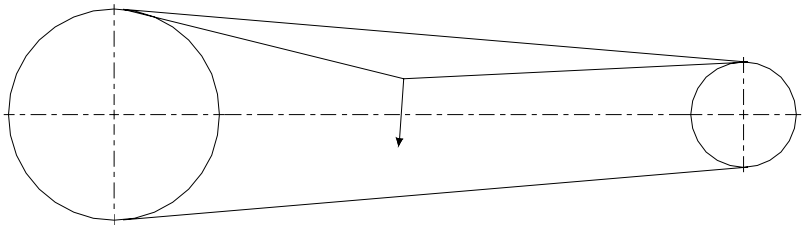

Belt Tensioning Diagram

For the Sealcup 60, adjust the belt to achieve a deflection of 0.200” when a force of 5 to 6.5 lbs is applied.

Cam Follower Torque Values

To achieve maximum performance and life of the cam followers, tighten to the following values:

Cam Follower Type	Torque Value Nm	Torque Value ft/lbs
KR 19	8 Nm	5.9 ft/lbs
KR 22	15 Nm	11 ft/lbs
KR 26	15 Nm	11 ft/lbs

Preventative Maintenance Schedule

Description	Maintenance required:	Frequency
Doctor cup	Inspect doctor ring for damage · Minor nicks or scratches on the ring can be corrected by re-lapping the cup. If major damage (chipping) has occurred, send the cup to TTA for replacement of the doctor ring.	Every 8 hours of operation.
Safety Guards	Test for proper function · When the guard is raised, the machine should stop immediately. · The Stop button indicator lampshould flash.	Every 8 hours of operation.
E-Stop	Test for proper operation · When the E-Stop button is pressed, the machine should stop immediately. · The Stop button indicator lamp should flash. · All machine functions are disabled.	Every 8 hours of operation.
Controls	Test for proper functions · Test all buttons for proper machine functions. · Adjust speed control through full range and check for continuous speed adjustment.	Every 8 hours of operation
Cliche slide	Clean slide of all ink and other residue · Ink build up in the area of the cliche rollers may lead to excessive friction and premature failure. · Ink build up in the cliche area may lead to improper seating of the cliche upon cliche change. Inspect guide rails for wear · Grease guide rails · Lubricate guide rail on left side with oil via access hole. (see page 21)	Every 8 hours of operation Every 50 hours of operation
Cliche rollers	Inspect all cliche rollers (cam followers) for smooth rolling motion. · While the machine is running and the slide and all rollers are clean, all rollers should roll with the slide motion. · Erratic or no motion may indicate a damaged or dirty cam follower bearing. · Check bearing adjustment - adjust if required. · If still erratic, replace bearing. Inspect rollers for proper tension · With the machine stopped, the rollers should slip on the slide when rotated by hand. If roller is too loose or too tight, adjust roller via eccentric bolt to proper tensioning. (see page 22)	Every 50 hours of operation Every 200 hours of operation
Pad slide	Inspect pad ram guide rods · After cleaning the guide rods, they must be lubricated. (see page 21)	Every 200 hours of operation
Positive stop for cliche slide	Check for wear and proper adjustment · Check condition of urethane bumper - replace if required. · Check adjustment of stop screw . (see page 22)	Every 1000 hours of operation

Preventative Maintenance Schedule (continued)

Description	Maintenance required:	Frequency
Drive cam	Clean and inspect cam tracks · The cam tracks must be clear of foreign matter. · After cleaning the cam tracks, they must be lubricated. (See page 21)	Every 200 hours of operation.
Drive belt	Inspect for wear and/or damage · Replace worn and/or damaged belt Inspect for proper tensioning · Only proper tensioning assures maximum life of drive belt. (See page 19)	Every 200 hours of operation.
Gear box	Inspect for leaks · Find cause of leak and repair as required. · Check oil level. Add oil when needed. Flush and replace gearbox oil (See page 21)	Every 50 hours of operation. Every 5000 hours of operation.

Lubrication Schedule

First Change or Application	Consecutive Changes or Applications	Recommended Lubricant Manufacturer:	Brand name: (or equivalent)
Gear Box: The gear box is filled with SYNTHETIC OIL MOBIL SHC 629 to the oil level plug hole.			
500 hr. of operation	5000 hr. of operation	Mobil Oil Corp.	SHC 629
Cam followers: The cam followers are permanently lubricated at the factory and sealed. Additional lubrication is not required.			
Cliche slide guide rail: The cliche slide guide rail is lubricated with light machine oil through the access hole on the left side.			
50 hr. of operation	50 hr. of operation	Mobil Oil Corp.	DTE 25
Cliche slide: The cliche slide is lubricated with lithium grease			
50 hr. of operation	50 hr. of operation	Mobil Oil Corp.	Mobilux 2
Pad ram guide rods: The pad ram guide rods are lubricated with light machine oil			
1000 hr. of operation	2000 hr. of operation	Mobil Oil Corp.	DTE 25
Drive cam tracks: The drive cam tracks are lubricated with a high pressure lithium grease			
200 hr. of operation	200 hr. of operation	Mobil Oil Corp.	Mobilux EP2

Adjustment of the Cliche Slide Limit Stop

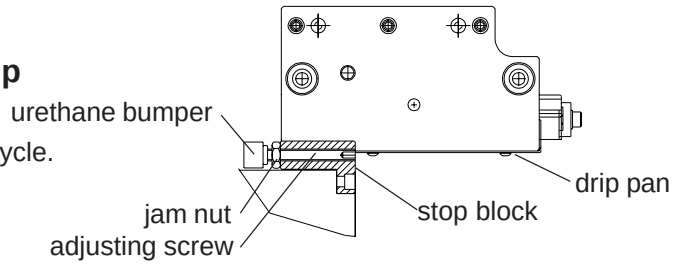

- Jog the machine to home position or run to end of cycle.
- Switch off Main Disconnect Switch.
- Remove the drip tray.
- Remove the limit stop block.
- Check condition of urethane bumper. Replace if required.
- Loosen the jam nut and turn the adjusting screw counterclockwise at least 3 turns.
- Install the limit stop block into the machine.
- Switch on Main Disconnect Switch.
- Jog the machine until the pad and cliche slides are fully extended
- Switch off Main Disconnect Switch.
- Adjust the limit screw by turning clockwise until the stop screw makes contact with the support, then turn an additional 1/4 turn.
- Switch on Main Disconnect Switch.
- Jog the machine to home position.
- Switch off Main Disconnect Switch.
- Remove the limit stop block.
- Without moving the adjusting screw, tighten the jam nut.
- Replace the limit stop block
- Replace the drip tray.
- Switch on Main Disconnect Switch.
- Adjustment is completed.

Adjustment of Cliche Slide Cam Followers

- Switch off Main Disconnect Switch.
- Disconnect the cliche slide from the arm.
- Loosen and raise the four upper eccentric bearings to their full height so they do not interfere with the adjustments of the bottom cam followers.
- Loosen and lower the right rear eccentric bearing to it's lowest possible position.
- Position the slide on the bottom three bearings so the back edge is just over the rear bearings.
- Apply enough pressure to the slide by hand to prevent the slide from rocking. Bring up the right rear bearing until it touches the slide (paying attention not to raise the slide off of the three fixed bearings). The adjustment may be checked with an indicator if desired. Set up the indicator on the outside edge of the slide. Rock the slide and adjust the bearing until the measurable rock is less than 0.0005". After positioning the bearing, lock the jam nut, being careful not to change the position of the bearing. Remove indicator, if used.
- Lower the upper left side grooved bearings until they both make contact with the slide.
- Adjust the front left bearing until it cannot be easily rotated by hand when the slide is held stationary. Tighten the jam nut and verify smooth movement of the slide when moved in and out.
- Adjust the right front bearing following the procedure above.
- Adjust the right rear bearing following the procedure above.
- Adjust the left rear bearing following the procedure above.
- Verify that all the bearings still have a preload (cannot be easily rotated by hand when the slide is held stationary). If not, adjust again.
- Connect the slide arm to the slide.
- Switch on Main Disconnect Switch.
- Adjustment is completed.

Automation Interface

The machine controls can be interfaced to additional equipment (automation).

The following listed machine functions can be accessed via a receptacle on the back panel. The following standard signals are available:

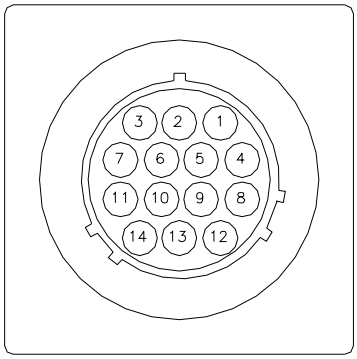

Automation interface connector X10.

PIN NUMBER	WIRE NUMBER	FUNCTION	DESCRIPTION
1	+24	+24 VDC (before E-Stop)	External power
2	19	E-Stop chain (start)	Input to printer
3	GND	GROUND	
4	23	E-Stop (Pushbutton)	External output
5	22	Master control relay (MCR)	Input to printer
6	X0	Printer start	Input to printer
7	X2	Manual select	Input to printer
8	4L1	220VAC Line Voltage	Input to printer
9	4L2	220VAC Line Voltage	Input to printer
10	Y10	Printer Fault	Output
11	Y6	Printer cycle end	External output
12	X6	Automation in position	Input to printer
13	Y7	Automation start	External output
14	NEG	0 VDC (power reference)	External power

Machine Alarm Messages and Troubleshooting Guide

Fault Message	The Emergency Stop switch is	Unlock the Emergency Stop switch.
UNLOCK EMERGENCY STOP	pressed. Machine cover is not closed. The emergency stop circuit is interrupted.	Close cover. Check the emergency stop circuit for an open line.
GUARD CLOSED? CUP LOCKED?	The guard door is open. ink cup pressure clamp not locked.	Check and close guard doors. Lock cup down. Check limit switches.
INVERTER FAULT	A fault has occurred in the frequency inverter. (See page 15)	Turn off main disconnect wait 10 sec. turn main disconnect back on to reset the inverter. If problem persists, contact TTA for service assistance.
TAPE CLEANER RET X5 PROX. FAULT	Tape cleaner is enabled and has not returned to the home(out) position.	Verify main air supply is on. Verify that the valve shifted. Check prox switch for misadjustment or malfunction.
TAPE CLEANER EXT X4 PROX. FAULT	Tape cleaner is enabled and has not shifted to the clean(in) position.	Verify main air supply is on. Verify that the valve shifted. Check prox switch for misadjustment or malfunction.
#-- STUCK #-- PRX.SWITCH FAULT	Prox switch # x11,x12,or x13 has remained in either the on or off state.	Press stop button to reset. Check prox switches for misadjustment or malfunction.
TAPE-CLEAN CYCLE RUNNING V	Pad Clean is enabled and active	Normal display when in active cleaning cycle. Scroll down and follow key sequence to reset tape clean cycle.
PAD SAFETY AUTOM. NOT HOME	Part shuttle device is not in home position indication a possible pad collision.	Verify device is in home position. Check prox switches for misadjustment or malfunction. Slow down printer to allow more time for part index.
Symptom	**Possible Causes**	**Recommended Action**
No multiple hits	Multiple print option not selected. Proximity switch PX1 defective.	See page 9 Check for proper gap(1mm) between Switch and cam and adjust if needed. Check wire connections at terminal Blocks - repair as needed. Replace defective switch or cable.
No pad delay	Pad delay option not selected or Delay time set to zero. Proximity switch PX2 defective.	See page 9 Check for proper gap(1mm) between Switch and cam and adjust if needed. Check wire connections at terminal Blocks - repair as needed. Replace defective switch or cable.
No stop at end of cycle	Proximity switch PX3 defective.	Check for proper gap(1mm) between Switch and cam and adjust if needed. Check wire connections at terminal Blocks - repair as needed. Replace defective switch or cable.
Machine will not cycle (single or continuous mode) - No fault message.	Machine not at home position.	Select manual mode - press Jog Forward button (9) until jog motion Stops. Machine is now at home Position.
No display or lights	Main disconnect off. Power supply circuit breaker tripped.	Switch main disconnects on. Reset circuit breaker CB1 or CB2

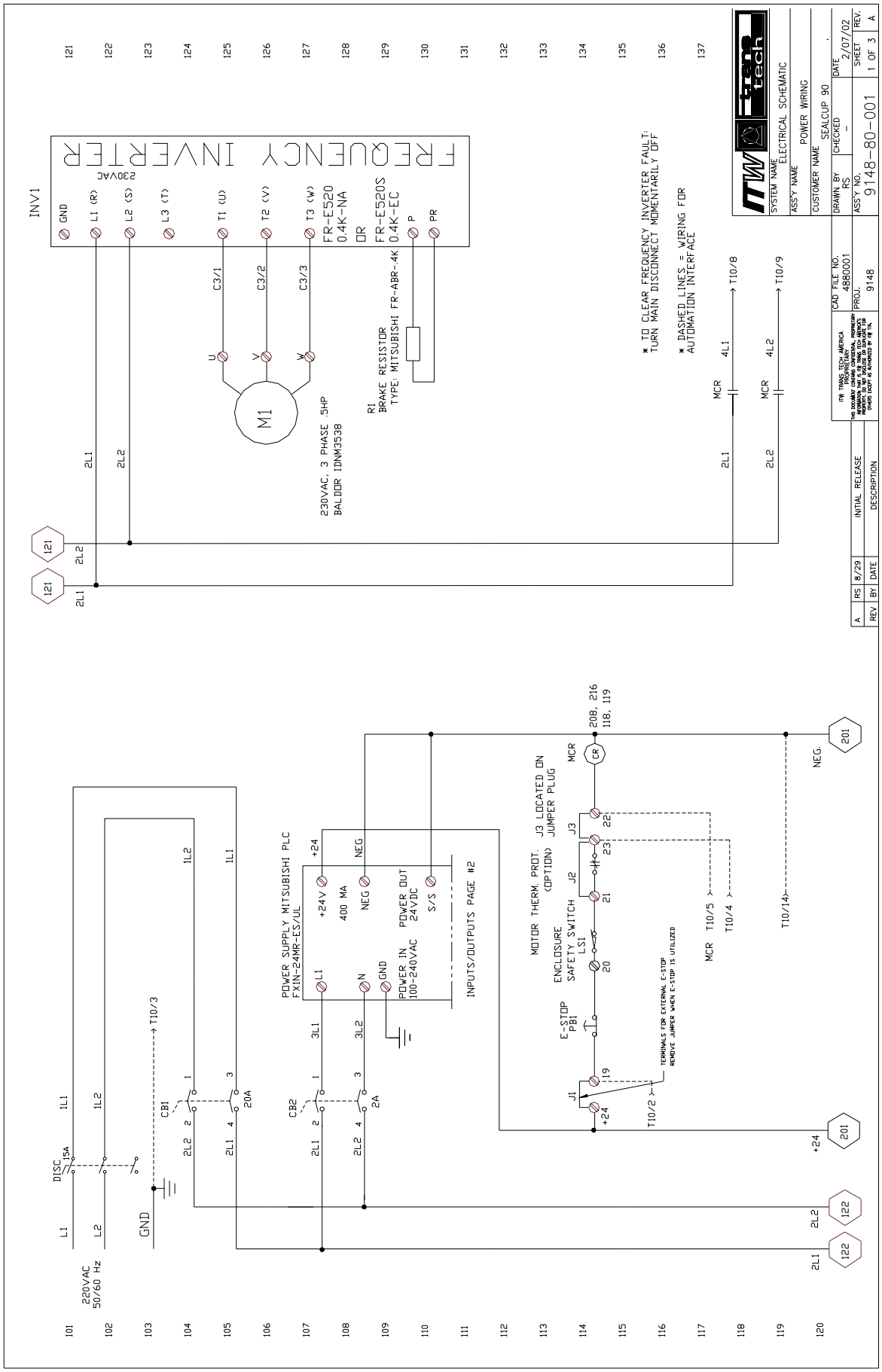
INV1
FREQUENCY INVERTER
230VAC
FR-E520
0.4K-NA
OR
FR-E520S
0.4K-EC
M1
230VAC, 3 PHASE .5HP
BALDOR IDNM3538
R1
BRAKE RESISTOR
TYPE: MITSUBISHI FR-ABR-.4K
* TO CLEAR FREQUENCY INVERTER FAULT:
TURN MAIN DISCONNECT MOMENTARILY OFF
* DASHED LINES = WIRING FOR
AUTOMATION INTERFACE
220VAC
50/60 Hz
DISC
GND
POWER SUPPLY MITSUBISHI PLC
FX1N-24MR-ES/UL
400 MA
POWER IN
100-240VAC
POWER OUT
24VDC
INPUTS/OUTPUTS PAGE #2
MOTOR THERM. PROT.
(OPTION)
J3 LOCATED ON
JUMPER PLUG
ENCLOSURE
SAFETY SWITCH
LS1
E-STOP
PB1
TERMINALS FOR EXTERNAL E-STOP
REMOVE JUMPER WHEN E-STOP IS UTILIZED
SYSTEM NAME
ELECTRICAL SCHEMATIC
ASSY NAME
POWER WIRING
CUSTOMER NAME
SEALCUP 90
DRAWN BY
RS
CHECKED
DATE
2/07/02
ASSY NO.
9148-80-001
SHEET
1 OF 3
REV.
A
CAD FILE NO.
4880001
PROJ.
9148
INITIAL RELEASE
DESCRIPTION
A
RS
8/29
REV
BY
DATE

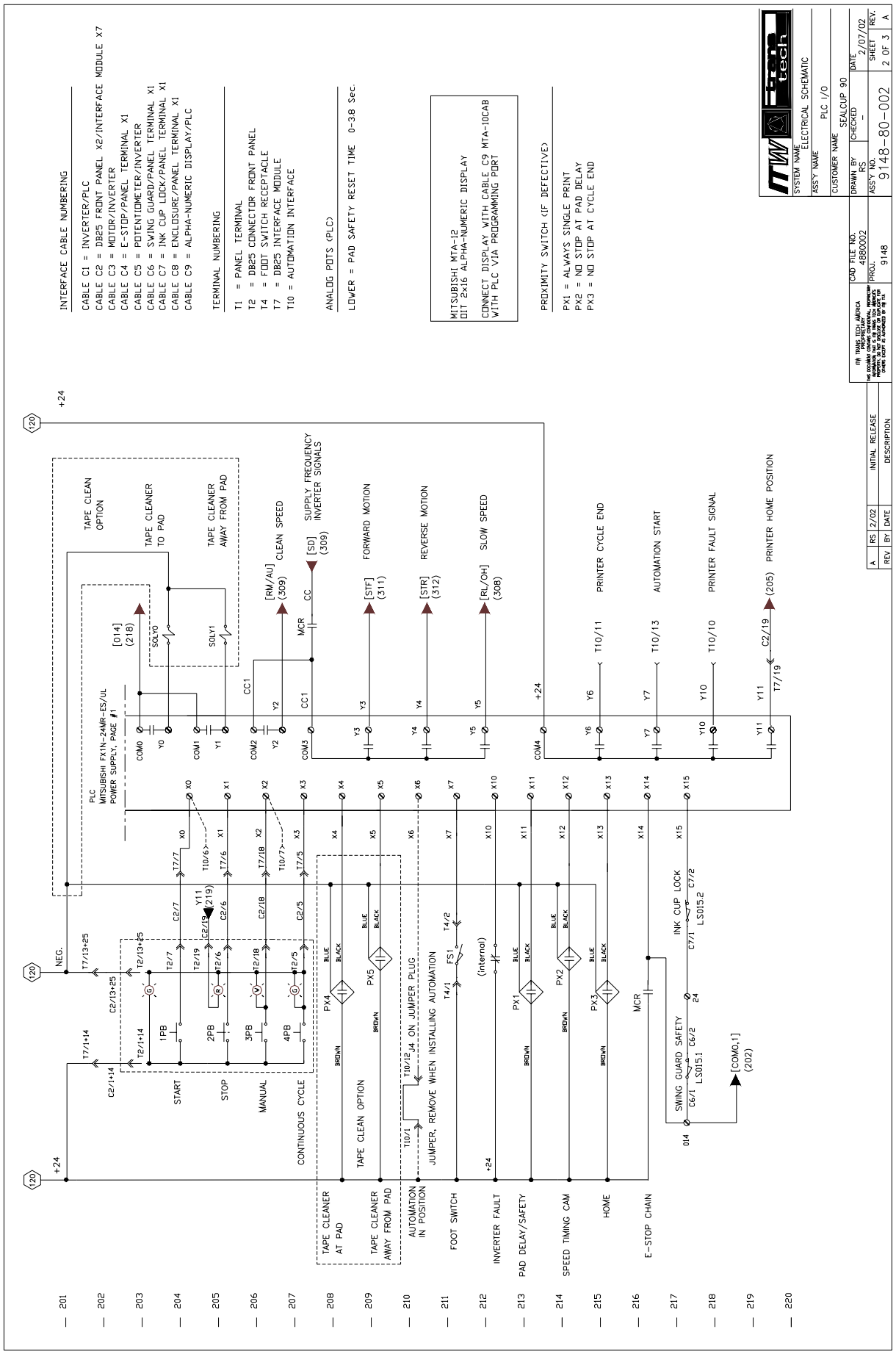
INTERFACE CABLE NUMBERING
CABLE C1 = INVERTER/PLC
CABLE C2 = DB25 FRONT PANEL X2/INTERFACE MODULE X7
CABLE C3 = MOTOR/INVERTER
CABLE C4 = E-STOP/PANEL TERMINAL X1
CABLE C5 = POTENTIOMETER/INVERTER
CABLE C6 = SWING GUARD/PANEL TERMINAL X1
CABLE C7 = INK CUP LOCK/PANEL TERMINAL X1
CABLE C8 = ENCLOSURE/PANEL TERMINAL X1
CABLE C9 = ALPHA-NUMERIC DISPLAY/PLC
TERMINAL NUMBERING
T1 = PANEL TERMINAL
T2 = DB25 CONNECTOR FRONT PANEL
T4 = FOOT SWITCH RECEPTACLE
T7 = DB25 INTERFACE MODULE
T10 = AUTOMATION INTERFACE
ANALOG POTS (PLC)
LOWER = PAD SAFETY RESET TIME 0-38 Sec.
MITSUBISHI MTA-12
DIT 2x16 ALPHA-NUMERIC DISPLAY
CONNECT DISPLAY WITH CABLE C9 MTA-10CAB
WITH PLC VIA PROGRAMMING PORT
PROXIMITY SWITCH (IF DEFECTIVE)
PX1 = ALWAYS SINGLE PRINT
PX2 = NO STOP AT PAD DELAY
PX3 = NO STOP AT CYCLE END
PLC
MITSUBISHI FX1N-24MR-ES/UL
POWER SUPPLY, PAGE # 1
TAPE CLEAN OPTION
TAPE CLEANER TO PAD
TAPE CLEANER AWAY FROM PAD
CLEAN SPEED
SUPPLY FREQUENCY INVERTER SIGNALS
FORWARD MOTION
REVERSE MOTION
SLOW SPEED
PRINTER CYCLE END
AUTOMATION START
PRINTER FAULT SIGNAL
PRINTER HOME POSITION
START
STOP
MANUAL
CONTINUOUS CYCLE
TAPE CLEAN OPTION
JUMPER, REMOVE WHEN INSTALLING AUTOMATION
J4 ON JUMPER PLUG
INK CUP LOCK
SWING GUARD SAFETY
TAPE CLEANER AT PAD
TAPE CLEANER AWAY FROM PAD
AUTOMATION IN POSITION
FOOT SWITCH
INVERTER FAULT
PAD DELAY/SAFETY
SPEED TIMING CAM
HOME
E-STOP CHAIN
SYSTEM NAME ELECTRICAL SCHEMATIC
ASSY NAME PLC I/O
CUSTOMER NAME SEALCUP 90
DRAWN BY RS
CHECKED
DATE 2/07/02
ASSY NO. 9148-80-002
SHEET 2 OF 3
REV. A
CAD FILE NO. 4860002
PROJ. 9148
A. RS 2/02 INITIAL RELEASE
REV BY DATE DESCRIPTION

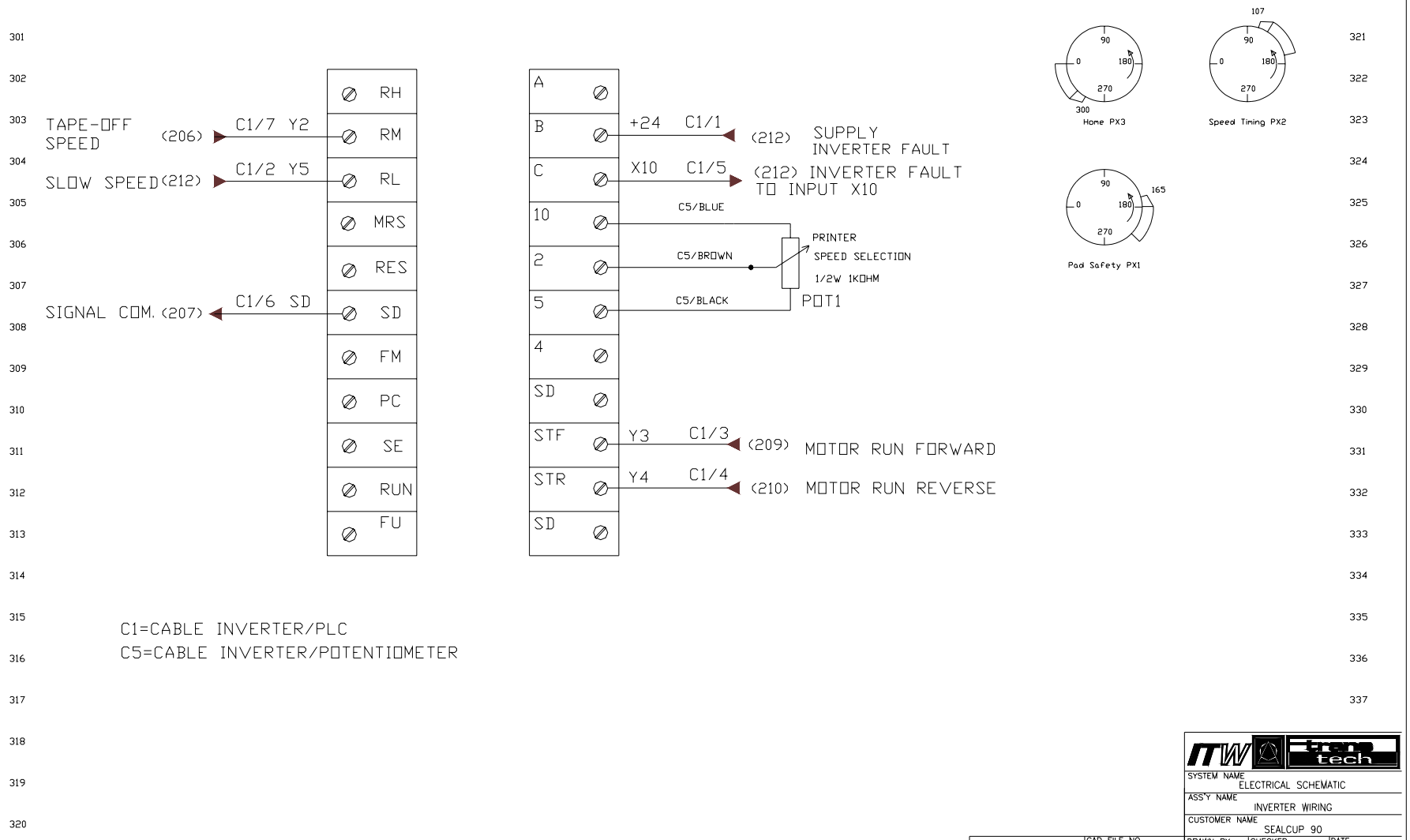

REV	BY	DATE	DESCRIPTION
A	RS	8/29	INITIAL RELEASE

ITW TRANS TECH AMERICA PROPRIETARY
THIS DOCUMENT CONTAINS CONFIDENTIAL, PROPRIETARY INFORMATION THAT IS ITW TRANS TECH AMERICA'S PROPERTY. DO NOT DISCLOSE OR DUPLICATE FOR OTHERS EXCEPT AS AUTHORIZED BY ITW TTA.

CAD FILE NO. 4880003	SYSTEM NAME: ELECTRICAL SCHEMATIC	
PROJ. 9148	ASS'Y NAME: INVERTER WIRING	
	CUSTOMER NAME: SEALCUP 90	
	DRAWN BY: RS	CHECKED: –
	DATE: 1/31/02	
	ASS'Y NO. 9148-80-003	SHEET 3 OF 3
	REV. A	

Index

A

Adjustment of cliche slide cam followers 22
Adjustment of the cliche slide limit stop 22
Automatic Operation 11
Automation Interface 23

B

Batch Counter 9, 10
Belt tensioning 19

C

Cautions 4
Cliche clamp 15
Cliche positioning screw 15
Connecting to power 5
Contact Trans Tech 13
Continuous Cycle 11
Continuous Cycle / Setup button 6
Continuous Cycle Mode 7
Controller display window 6
Cup clamping arms 15
Cup clamping lever 15
Cup jam 12
Cursor Control 6, 8
Cursor Down 8
Cursor Left 8
Cursor Right 8
Cursor Up 8
Cycle Speed Control 6, 8
Cycle Start button 6
Cycle Stop button 6
Cycles per Hour 17

D

Decrease value 8
Display Batch 12
Display Rate 12

E

Eccentric bearing 22
Electrical Schematics 25
Emergency Stop Button 6, 8

F

Foot Switch 8

G

Grooved bearing 22

H

Handling of the ink cup 14
Humidity 5

I

Increase value 8
Increase/Decrease Value 6, 8
Index Table 9
Ink Cup and Cliche 14
Installation Instructions 5
Installing the Ink Cup and Cliche 15

J

Jog Forward 8
Jog Index Table 8
Jog Keypad 8
Jog Reverse 8

L

Leveling the Machine 5
Liability 4
Limit stop 22
Locking screw 15
Lubrication Schedule 21

M

Machine Alarm Messages 24
Machine Dimensions 18
Machine Weight 17
Maintenance 19
Manual Jog Keypad 6
Manual Mode 7
Manual Mode / Setup button 6

N

Number of Prints 9

O

Operating Controls 7, 8
Options ON/OFF 6, 8

P

Pad Clean 10
Pad Clean Count 10
Pad Clean Stroke 10
Pad Delay 9
Pad Pressure 17
Pad spindle 15
Preparing to Print 13
Preventative Maintenance Schedule 20
Production Rate 10, 12