trans tech®

Technical Services

Gemini 60/90 rev 2

Spare Parts Manual

Standard # 9640-00-000 (60)
9641-00-000 (90)

ITW Trans Tech: Complete Pad Printing Solutions

ITW TRANS TECH • *An ITW Decorating Company* • 475 North Gary Avenue • Carol Stream, IL 60188-4900
Phone: 630.752.4000 • **Fax:** 630.752.4489 • **Web Site:** www.itwtranstech.com

For best results when printing this file, set printer to 300 dpi.

While every effort has been made to ensure the accuracy of this manual, Trans Tech cannot be held responsible for any errors or omissions. We reserve the right to make changes to technical specifications without prior notice.

ITW Trans Tech , *An Illinois Tool Works Company* • 475 North Gary Avenue • Carol Stream, IL 60188-4900
Phone: (630) 752-4000

Contents

Guarding **4**
Chasis **6**
Pad Ram Slide **8**
Rotary Gear Rack.....**10**
Pneumatics **12**
Electrics **14**
Cup Accessories **16**
Ink Cups **18**

Guarding

105-00-145	magnetic plug
501-00-031	socket head cap screw
501-00-367	socket flat head cap screw
501-02-381	socket flat head cap screw
501-02-394	socket flat head cap screw
501-02-396	socket flat head cap screw
501-20-014	dowel pin
501-14-497	socket button head cap screw
501-32-020	socket flat head cap screw
501-34-005	socket button head cap screw
501-34-006	socket button head cap screw
501-34-010	socket button head cap screw
501-34-036	socket button head cap screw
531-30-002	flat washer
531-30-003	flat washer
531-30-006	flat washer
541-00-013	t-nut M6
601-01-004	end cap
601-01-012	hinge, steel
601-05-140	knob, black
601-10-005	chromed hinge
601-33-005	lift-off hinge
601-33-010	lift-off hinge
9632-60-002	magnetic door catch
9632-60-003	door catch
9632-60-004	door spacer
9632-60-013	vertical profile, left hand
9632-60-016	vertical profile, right hand
9640-60-008	lexan guard, left hand
9640-60-009	lexan guard, right hand
9640-60-010	front side guard
9640-60-012	side guard
9640-60-014	horizontal item, left hand
9640-60-015	horizontal item, front, left hand
9640-60-017	horizontal item, front, right hand
9640-60-018	horizontal item, right hand
9640-60-019	rear joining plate
9640-60-020	front joining plate
9640-60-021	horizontal item, rear, left hand
9640-60-022	horizontal item, rear, right hand
9640-60-027	front cover
9640-60-033	top cover
9640-60-037	back door
9640-60-044	hinge spacer
9640-80-035	control’s face plate

GUARDING

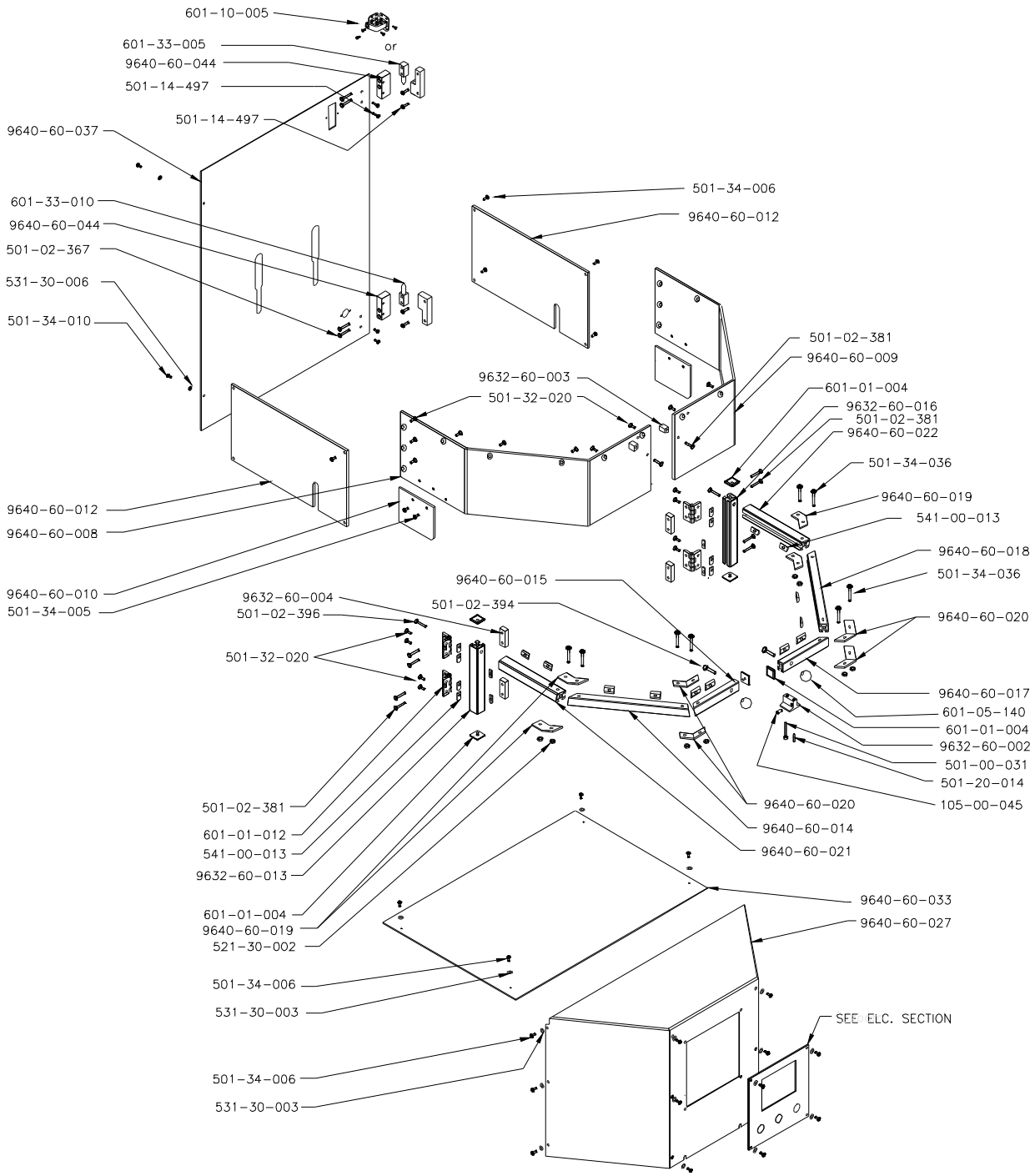
601-10-005
or
601-33-005
9640-60-044
501-14-497
501-14-497
9640-60-037
601-33-010
9640-60-044
501-02-367
531-30-006
501-34-010
501-34-006
9640-60-012
501-02-381
9640-60-009
601-01-004
9632-60-016
501-02-381
9640-60-022
501-34-036
9640-60-019
541-00-013
9640-60-018
501-34-036
9640-60-020
9640-60-017
601-05-140
601-01-004
9632-60-002
501-00-031
501-20-014
105-00-045
9640-60-020
9640-60-014
9640-60-021
9632-60-003
501-32-020
9640-60-012
9640-60-008
9640-60-010
501-34-005
9640-60-015
9632-60-004
501-02-396
501-02-394
501-32-020
501-02-381
601-01-012
541-00-013
9632-60-013
601-01-004
9640-60-019
521-30-002
501-34-006
531-30-003
501-34-006
531-30-003
9640-60-033
9640-60-027
SEE ELC. SECTION

Chassis

090-03-065	BUMPER, RUBBER
090-13-002	VIBRATION PAD
090-13-003	ADJUSTABLE LEVELERS (FEET)
103-18-401	SPACER-3/8" DIA. X 1/2" LG.
501-00-005	SHCS M3 X 12
501-00-018	SHCS 4MM X 30
501-00-020	SHCS 4MM X 40
501-00-041	SHCS M6 X 16
501-00-074	SHCS 8MM X 100
501-02-070	SHCS 8MM X 65
501-20-021	DOWEL PIN M6 X 20
501-30-024	M4 X 35 SHCS
501-30-025	SLHCS M6 X 20
501-30-062	M8 X 25 SHCS
501-34-030	M6 X 30 SHCS
501-34-035	M8 X 30 SHCS
521-30-005	4MM NUT
522-30-035	HEX NUT 1/2-13UNC
531-30-005	4MM WASHER
532-03-056	FLATWASHER 1/2" NOM.
541-04-051	M8 X 28 PULL-OUT DOWEL PIN
9640-01-010	STOP BLOCK - FRONT
9640-01-017	SHOCK STOP
9640-01-023	BAR - “X’ ADJUST
9640-01-024	SCREW ADJUST
9640-01-025	CONFINEMENT SCREW
9640-01-026	CONFINEMENT SCREW
9640-50-018	PLATE - TOP
9640-50-019	PLATE - BOTTOM
9640-50-020	PLATE - RIGHT SIDE
9640-50-033	FACE PLATE
9640-50-039	ELECTRICAL PANEL
9640-50-043	FOOT/PRINTER SUPPORT
9640-50-044	BASE SUPPORT
9640-50-045	UPPER SUPPORT/BRACKET
9640-50-046	STIFFNER
9640-50-047	PLATE - LEFT SIDE

CHASSIS

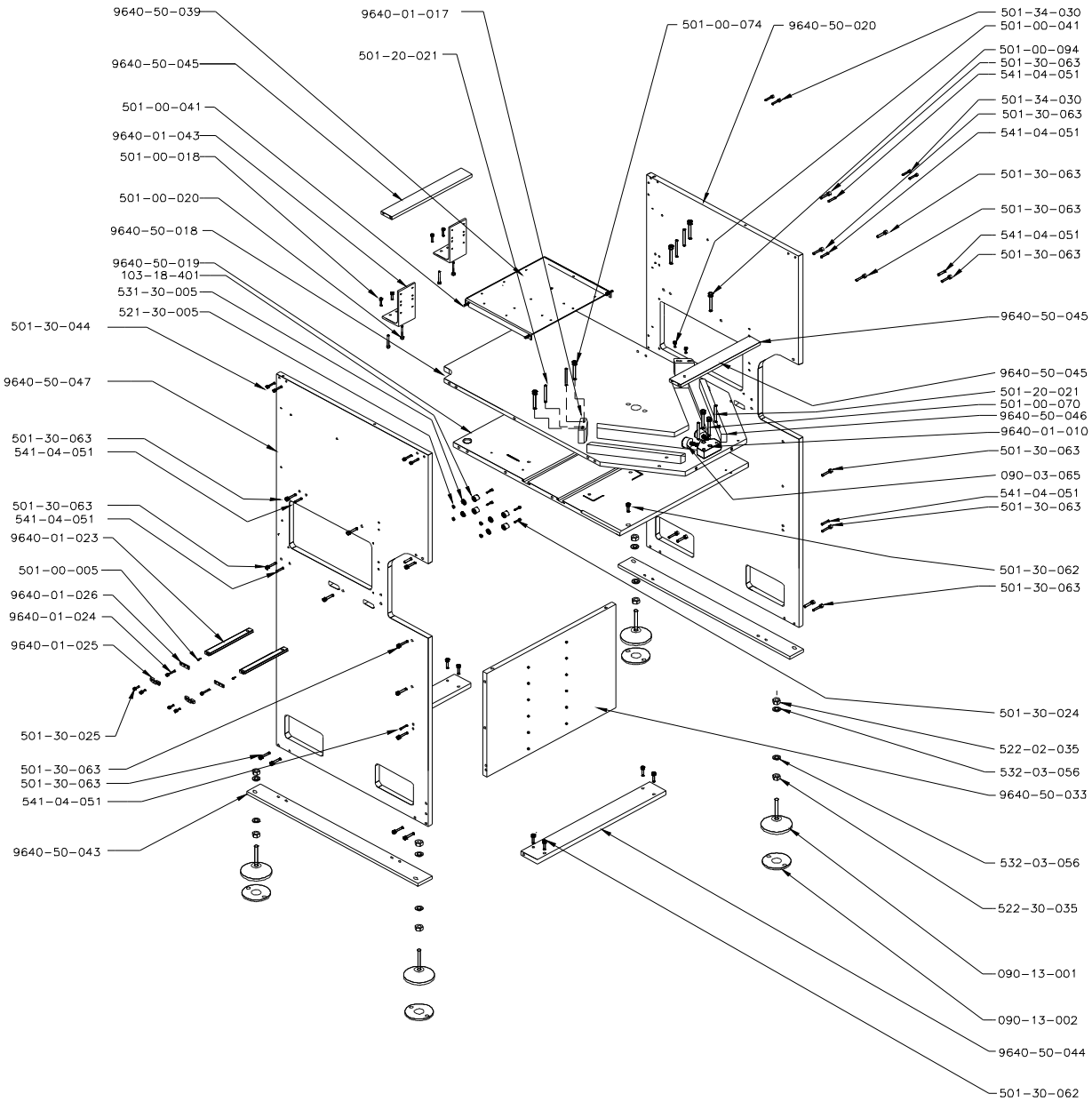
9640-50-039
9640-01-017
501-00-074
9640-50-020
501-34-030
501-00-041
501-20-021
501-00-094
9640-50-045
501-30-063
541-04-051
501-00-041
501-34-030
501-30-063
9640-01-043
541-04-051
501-00-018
501-30-063
501-00-020
501-30-063
9640-50-018
541-04-051
9640-50-019
501-30-063
103-18-401
531-30-005
521-30-005
9640-50-045
501-30-044
9640-50-045
9640-50-047
501-20-021
501-00-070
9640-50-046
9640-01-010
501-30-063
541-04-051
501-30-063
090-03-065
541-04-051
501-30-063
501-30-063
541-04-051
9640-01-023
501-30-062
501-00-005
501-30-063
9640-01-026
9640-01-024
9640-01-025
501-30-024
501-30-025
522-02-035
501-30-063
532-03-056
501-30-063
9640-50-033
541-04-051
9640-50-043
532-03-056
522-30-035
090-13-001
090-13-002
9640-50-044
501-30-062

Pad Ram

001-40-054	BEARING BLOCK
021-12-010	TIMING PULLEY
030-17-025	TIMING BELT
103-33-300	HEAGONAL ROD - ALUM
104-00-502	SPRING CONNECTOR
104-00-510	EXTENSION SPRING
201-01-080	AIR CYLINDER
209-00-029	JAM NUT 1/2-20
209-00-400	ALIGNMENT COUPLER
230-00-040	SHOCK ABSORBER
303-00-003	TERIMAL, RING
352-07-025	ENCODER
501-00-133	SHCS M16 X 40M LG
501-03-595	M6 X 20 SET SCREW
501-20-021	DOWEL M6 X 20
501-20-021	DOWEL PN M6 DIA. X 20
501-20-023	DOWEL PIN M6 DIA. X 40
501-30-026	SHCS M5 X 12
501-30-042	SHCS M6 X 20
501-30-043	SHCS M6 X 25
501-30-046	SHCS M6 X 40
501-30-068	SHCS M6X45
501-32-035	FHCS M6 X 60
501-34-003	BHCS M6X10
501-34-010	BHCS M5 X 10
761-00-060	RUBBER CUSHIONED STRAP
9640-02-001	PLATE - PAD SLIDE - L.H.
9640-02-002	PLATE - PAD SLIDE - R.H.
9640-02-003	GEAR RACK
9640-02-004	ANGLE - BRG BLOCK
9640-02-008	BEARING RAIL
9640-02-009	PAD MOUNT BAR
9640-02-011	SHOCK BLOCK
9640-02-021	MOUNT - ROD COUPLER LH
9640-02-022	MOUNT - ROD COUPLER RH
9640-02-024	PAD SPACER - 60 MODULE
9640-02-039	ENCODER BKT (FESTO)
9640-02-040	ENCODER TIMEING BELT, ARIES/GEMINI 60/90

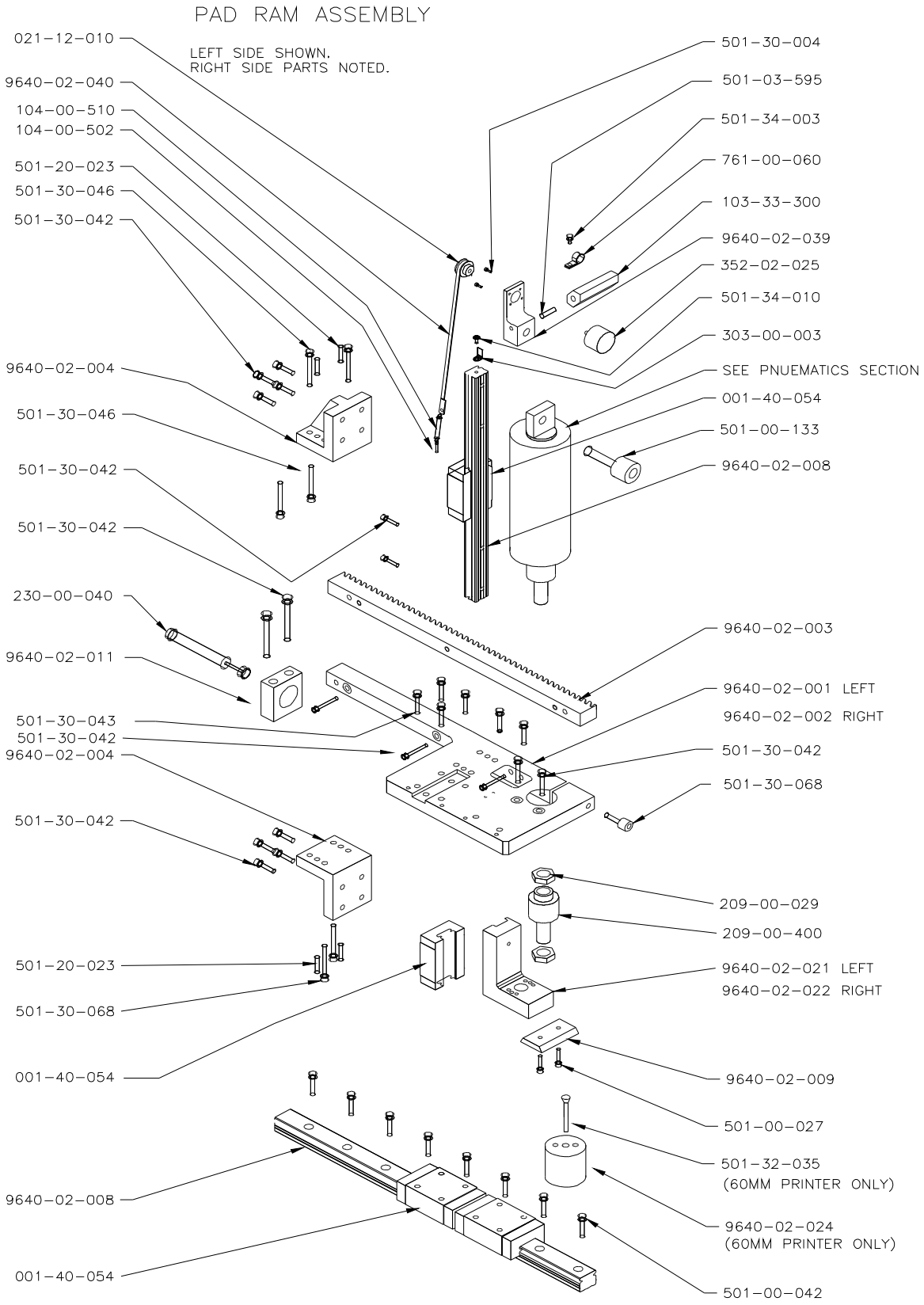
PAD RAM ASSEMBLY
LEFT SIDE SHOWN.
RIGHT SIDE PARTS NOTED.
021-12-010
9640-02-040
104-00-510
104-00-502
501-20-023
501-30-046
501-30-042
9640-02-004
501-30-046
501-30-042
501-30-042
230-00-040
9640-02-011
501-30-043
501-30-042
9640-02-004
501-30-042
501-20-023
501-30-068
001-40-054
9640-02-008
001-40-054
501-30-004
501-03-595
501-34-003
761-00-060
103-33-300
9640-02-039
352-02-025
501-34-010
303-00-003
SEE PNUEMATICS SECTION
001-40-054
501-00-133
9640-02-008
9640-02-003
9640-02-001 LEFT
9640-02-002 RIGHT
501-30-042
501-30-068
209-00-029
209-00-400
9640-02-021 LEFT
9640-02-022 RIGHT
9640-02-009
501-00-027
501-32-035
(60MM PRINTER ONLY)
9640-02-024
(60MM PRINTER ONLY)
501-00-042

ROTARY GEAR LINK

001-01-001	BALL BEARING
001-29-020	SELF-ALIGNING BALL BEARING
005-03-593	STEEL SHIM
005-03-594	STEEL SHIM
012-01-015	RETA NING RING
012-01-035	RETAINING RING
090-03-065	BUMPER, RUBBER (SEE CHASSIS SECTION)
211-01-004	ROTARY ACTUATOR (SEE PNEUMATIC SECTION)
211-01-126	PROX. MTG BRACKET (SEE PNEUMATIC SECTION)
501-00-066	SHCS 8MM X 45
501-00-077	SHCS 8MM X 130
501-00-087	SHCS 10MM X 30
532-40-058	NYLON WASHER 1-1/8" OD X 7/16"ID
9640-10-006	GEAR MODIFIED
9640-10-008	LINK
9640-10-009	LEVER
9640-10-013	BLOCK – PIVOT
9640-10-014	PIN – PIVOT
9640-10-036	STAND OFF ROTARY ACTUATOR
9641-10-007	PIN - LINKAGE

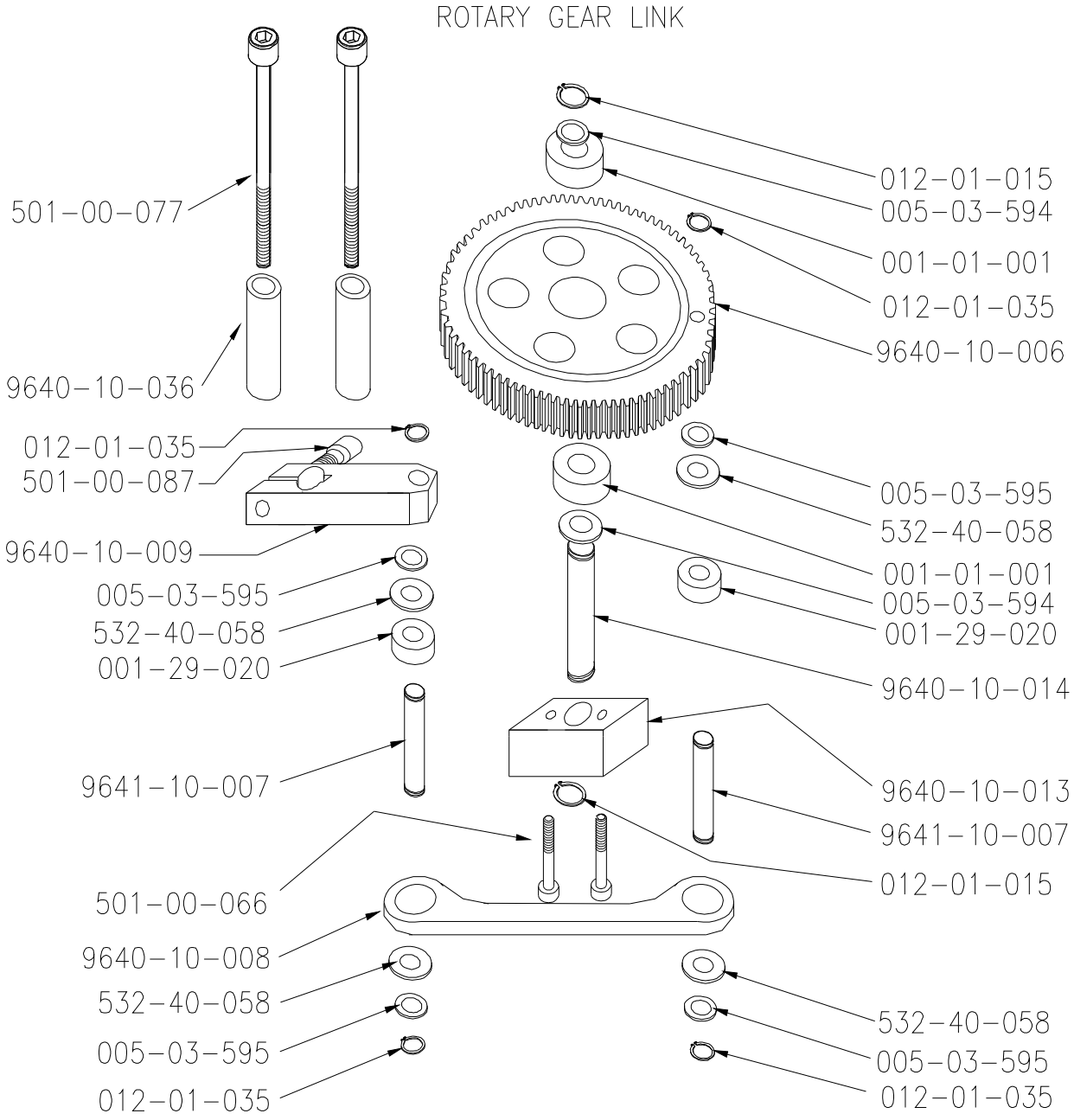
ROTARY GEAR LINK
501-00-077
9640-10-036
012-01-035
501-00-087
9640-10-009
005-03-595
532-40-058
001-29-020
9641-10-007
501-00-066
9640-10-008
532-40-058
005-03-595
012-01-035
012-01-015
005-03-594
001-01-001
012-01-035
9640-10-006
005-03-595
532-40-058
001-01-001
005-03-594
001-29-020
9640-10-014
9640-10-013
9641-10-007
012-01-015
532-40-058
005-03-595
012-01-035

PNEUMATICS

FO533342	SINGLE VALVE
FO533343	DOUBLE VALVE
FO537957	DOUBLE SINGLE VALVE (PAD RAM)
103-18-401	SPACER, UNTHREADED
201-01-080	ROUND CYLINDER, PAD RAM
202-01-035	FILTER/REGULATOR
202-01-064	VALVE TERMINAL ASSEMBLY /GEMINI
202-01-083	SOFT START VALVE
202-01-084	MAIN AIR ON/OFF VALVE
202-01-091	FLOW CONTROL VALVE
202-01-093	FLOW CONTROL VALVE, PAD RAM
202-01-176	NON-RET. VALVE (CHECKVALVE) WITH AIR PILOT
203-01-051	PRESSURE GAUGE
203-01-102	SUB-BASE
203-01-103	SUB-BASE
204-01-061	SILENCER
204-01-206	ELBOW FITTING
204-01-212	PUSH-IN L-FITTING
204-01-214	PUSH-IN L-FITTING
204-01-215	MULTI DISTRIB.
204-01-221	PUSH-IN L-FITTING
204-01-224	PUSH-IN FITTING
204-01-226	PUSH-IN L-FITTING
204-01-227	PUSH-IN L-FITTING
204-01-228	PUSH-IN FITTING
209-01-048	MOUNTNG BRACKET
211-01-003	SEMI-ROT. DRIVE, DOCTOR MODULE
211-01-004	SEMI-ROT. DRIVE, GEAR LINK
211-01-126	MOUNTING KIT
331-01-020	PRESSURE SWITCH
332-00-010	PROX. SENSOR
332-00-025	PROX. SENSOR
332-00-056	MOUNTING KIT
332-00-085	RIGHT ANGLE PROX PLUG WITH CABLE
332-00-086	STRAIGHT PROX PLUG WITH CABLE
332-00-110	VALVE COIL PLUG WITH CABLE
501-30-039	SHCS M6X18 ZP
560-04-005	O-RING

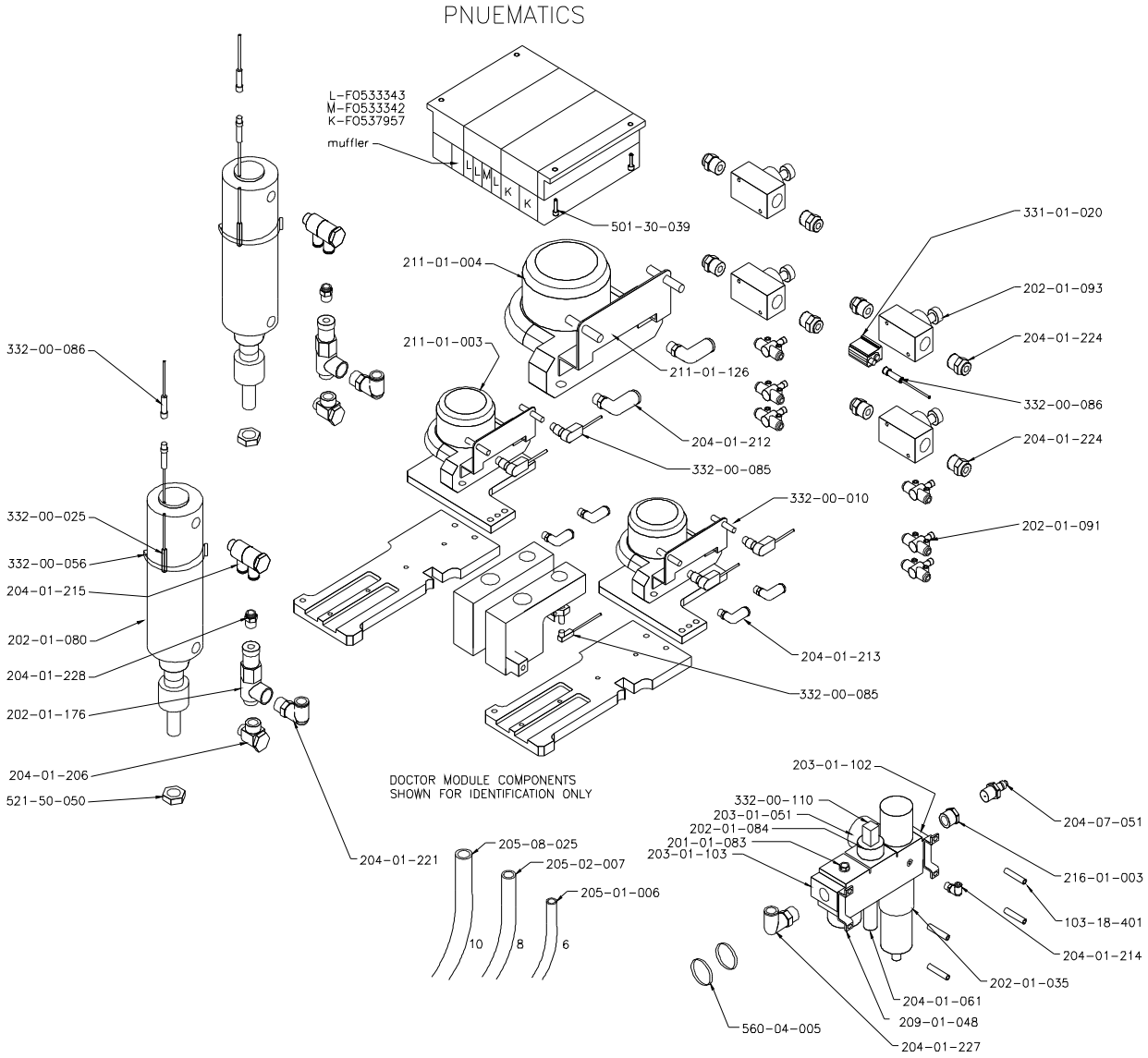
PNUEMATICS
L-F0533343
M-F0533342
K-F0537957
muffler
501-30-039
331-01-020
211-01-004
202-01-093
204-01-224
332-00-086
211-01-003
211-01-126
332-00-086
204-01-212
204-01-224
332-00-085
332-00-010
202-01-091
332-00-025
332-00-056
204-01-215
202-01-080
204-01-228
202-01-176
204-01-206
521-50-050
204-01-213
332-00-085
DOCTOR MODULE COMPONENTS
SHOWN FOR IDENTIFICATION ONLY
204-01-221
205-08-025
205-02-007
205-01-006
10
8
6
203-01-102
332-00-110
203-01-051
202-01-084
201-01-083
203-01-103
204-07-051
216-01-003
103-18-401
204-01-214
202-01-035
204-01-061
209-01-048
204-01-227
560-04-005

Electrical

302-02-015	wireway
302-02-152	wireway cover
303-01-002	terminal block
303-01-007	earth ground terminal
303-01-008	jumper
303-01-016	end barrier
305-12-010	power cord
312-08-015	suppressor, 115vac
312-17-010	power supply, 24v, 50w
321-06-044	plc (programmable logic controller)
321-06-201	plc backup battery
322-03-001	foot switch receptacle
322-05-010	plug, connector (9 contact)
322-05-039	contact socket
322-05-044	cable clamp
331-19-001	magnetic guard door switch
333-03-008	green pushbutton, with contact block
333-03-009	red pushbutton, with contact block
333-03-013	red mushroom head pushbutton
333-03-022	contact block, n.o.
343-00-011	relay socket
343-00-017	relay
353-01-010	fuse, 5 amp
354-02-025	main disconnect switch
361-24-006	PLC – Touchscreen communication cable
361-24-015	touch screen
369-12-010	resistor, 3.3k ohm
369-13-010	capacitor
391-60-005	cable, 7 conductor, per foot
392-01-001	din rail, per foot,
9640-80-035	control face plate

Electrical Panels

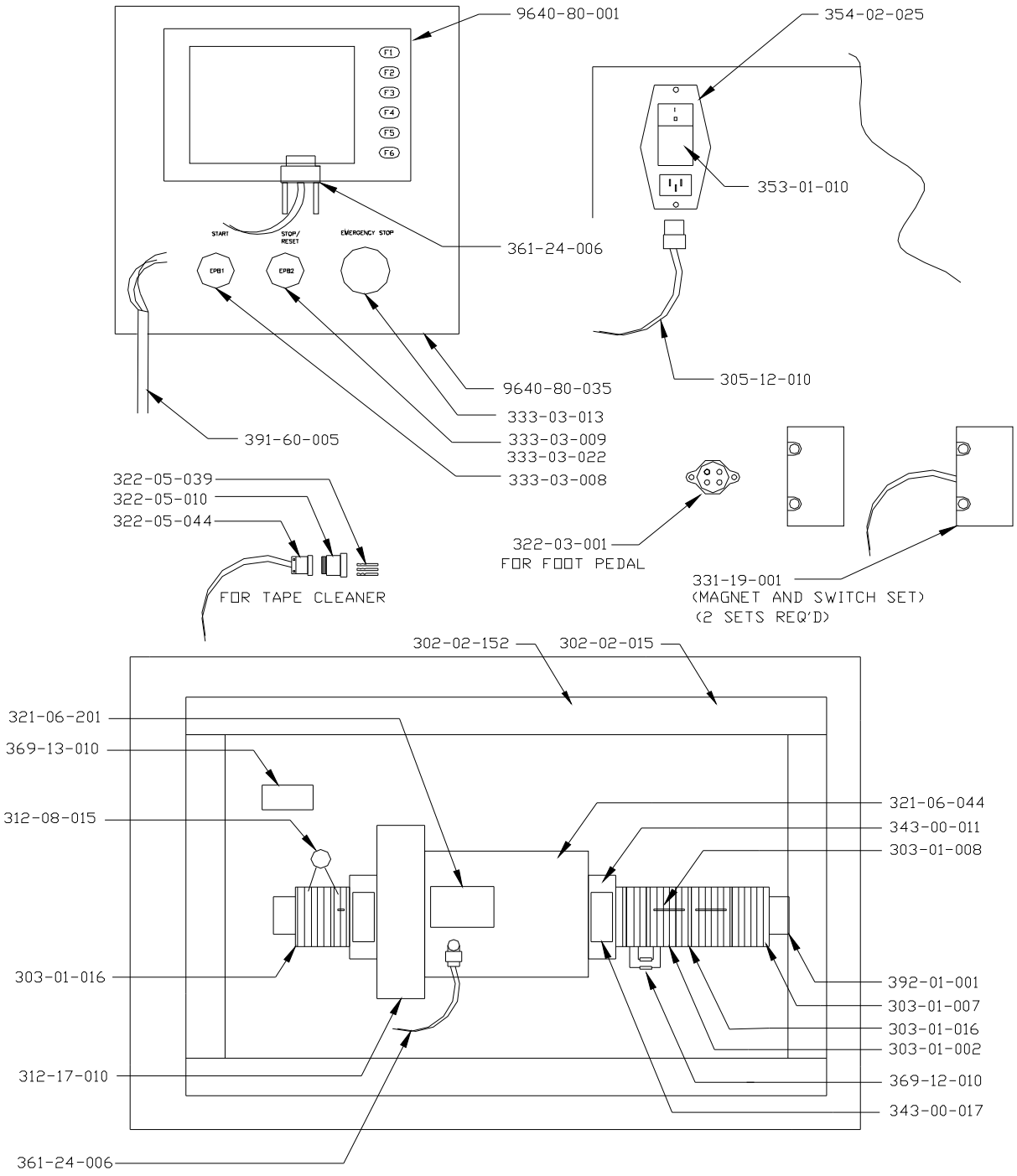

60MM SETUP TABLE - 9260-14-000

090-03-003	BUMPER (RECESS),
501-00-030	SOCKET HEAD CAP SCREW M5 X 30
501-04-496	SOCKET BUTTON HEAD CAP M5 X 12
501-20-029	DOWEL PIN M8 X 20
502-20-170	DOWEL PIN 1/4 X 3/8
9260-10-007	TOP PLATE, SETUP TABLE, 60MM CUP
9260-10-008	LEG

90MM SETUP TABLE - 9260-24-000

090-03-003	BUMPER (RECESS),
501-00-030	SOCKET HEAD CAP SCREW M5 X 30
501-04-496	SOCKET BUTTON HEAD CAP M5 X 12
501-20-029	DOWEL PIN M8 X 20
502-20-170	DOWEL PIN 1/4 X 3/8
9260-20-008	TOP PLATE, SETUP TABLE, 90MM CUP
9260-10-008	LEG

60MM SETUP TOOL – 9260-15-000

104-12-084	EXTENSION SPRING .313X1.025X.037
501-02-362	SOCKET FLAT HEAD CAP SCREW M5 X 12
501-20-009	DOWEL PIN M4 X 30
9260-10-009	YOKE BLOCK 60, 90, 130
9260-10-010	TONGUE 60MM CUP
9260-10-011	YOKE 60MM CUP
9260-10-012	CAM 60, 90, 130

90MM SETUP TOOL – 9260-25-000

104-12-084	EXTENSION SPRING .313X1.025X.037
501-02-362	SOCKET FLAT HEAD CAP SCREW M5 X 12
501-20-009	DOWEL PIN M4 X 30
9260-10-009	YOKE BLOCK 60, 90, 130
9260-10-011	YOKE 60MM CUP
9260-10-012	CAM 60, 90, 130
9260-20-009	TONGUE 90MM CUP

60MM SETUP TABLE
926014000 COMPLETE

90MM SETUP TABLE
926024000 COMPLETE

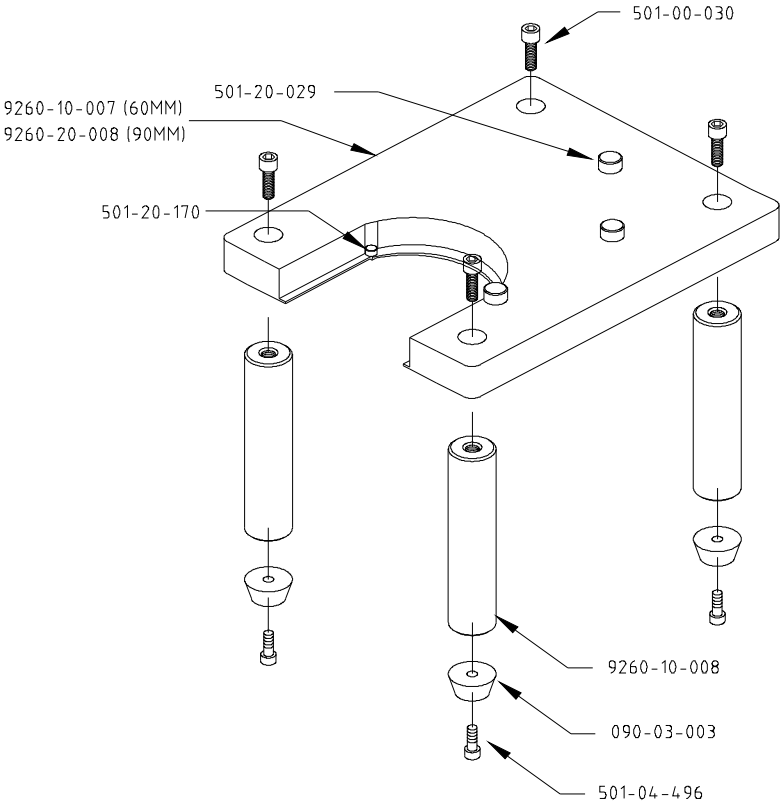

60MM SETUP CLAMP TOOL
926015000 COMPLETE

90MM SETUP CLAMP TOOL
926025000 COMPLETE

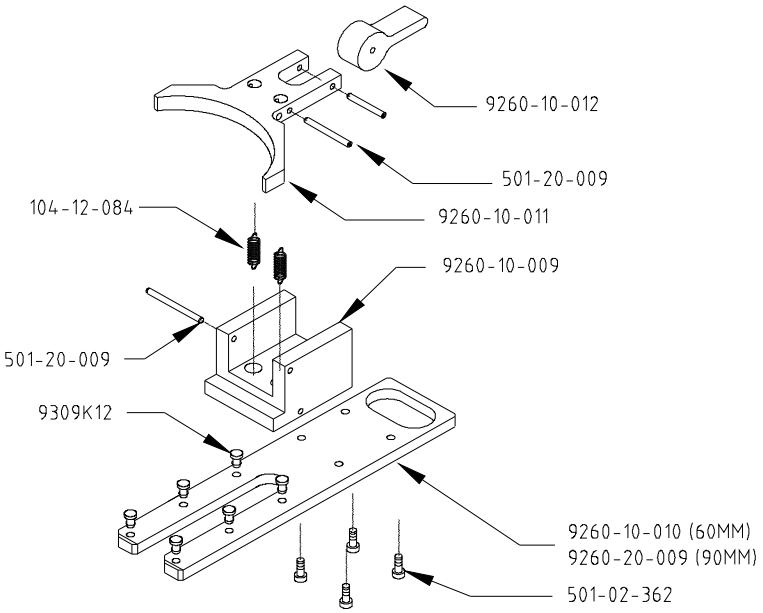

60mm & 90mm INK CUP OPTIONS

2901702	Seal For 60mm Doctor Ring
2902702	Seal For 90mm Doctor Ring
10902002	90mm Steel Doctor Ring
10903003	60mm Steel Doctor Ring
926010003	60mm Ceramic Doctor Ring
926010004	Express Liner, 60mm (100 Pack)
926012000	Redstar Multicup, 60mm W-Steel Ring
926012100	Redstar Multicup, 60mm W-Ceramic Ring
926016000	Space Frame Assy, 60mm Mechanical W- Carbide Ring
926016100	Space Frame Assy, 60mm Mechanical W- Ceramic Ring
926020003	90mm Ceramic Doctor Ring
926020004	Express Liner, 90mm (100 Pack)
926022000	Redstar Multicup, 90mm W-Steel Ring
926022100	Redstar Multicup, 90mm W-Ceramic Ring
926026000	Space Frame Assy, 90mm Mechanical W- Carbide Ring
926026100	Space Frame Assy, 90mm Mechanical W- Ceramic Ring

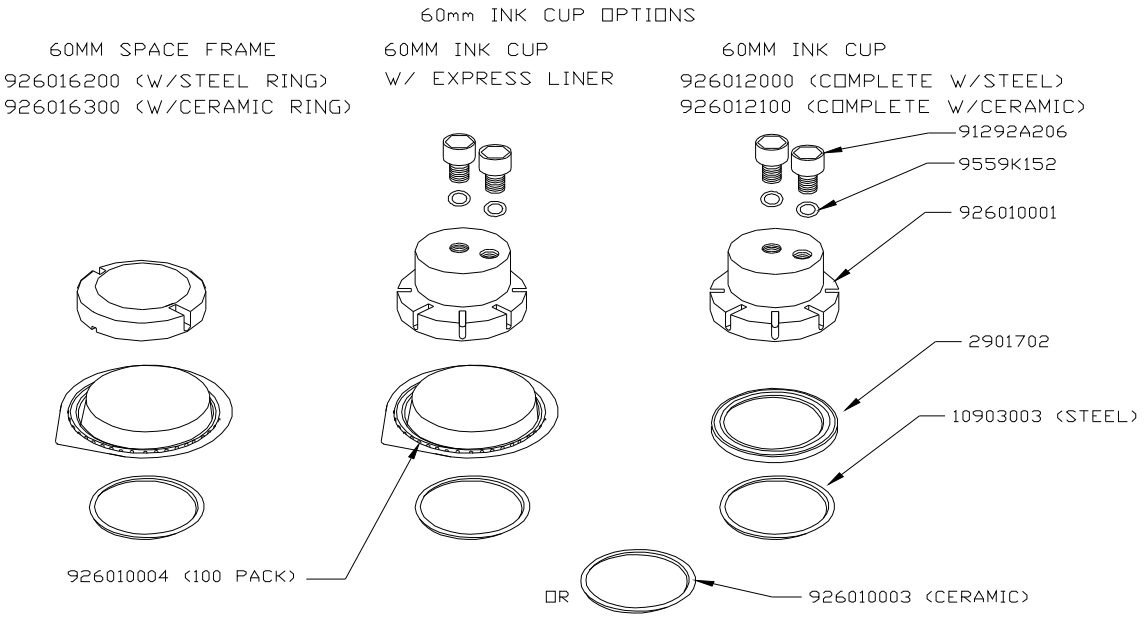
60mm INK CUP OPTIONS
60MM SPACE FRAME
926016200 (W/STEEL RING)
926016300 (W/CERAMIC RING)
60MM INK CUP
W/ EXPRESS LINER
60MM INK CUP
926012000 (COMPLETE W/STEEL)
926012100 (COMPLETE W/CERAMIC)
91292A206
9559K152
926010001
2901702
10903003 (STEEL)
926010004 (100 PACK)
OR
926010003 (CERAMIC)

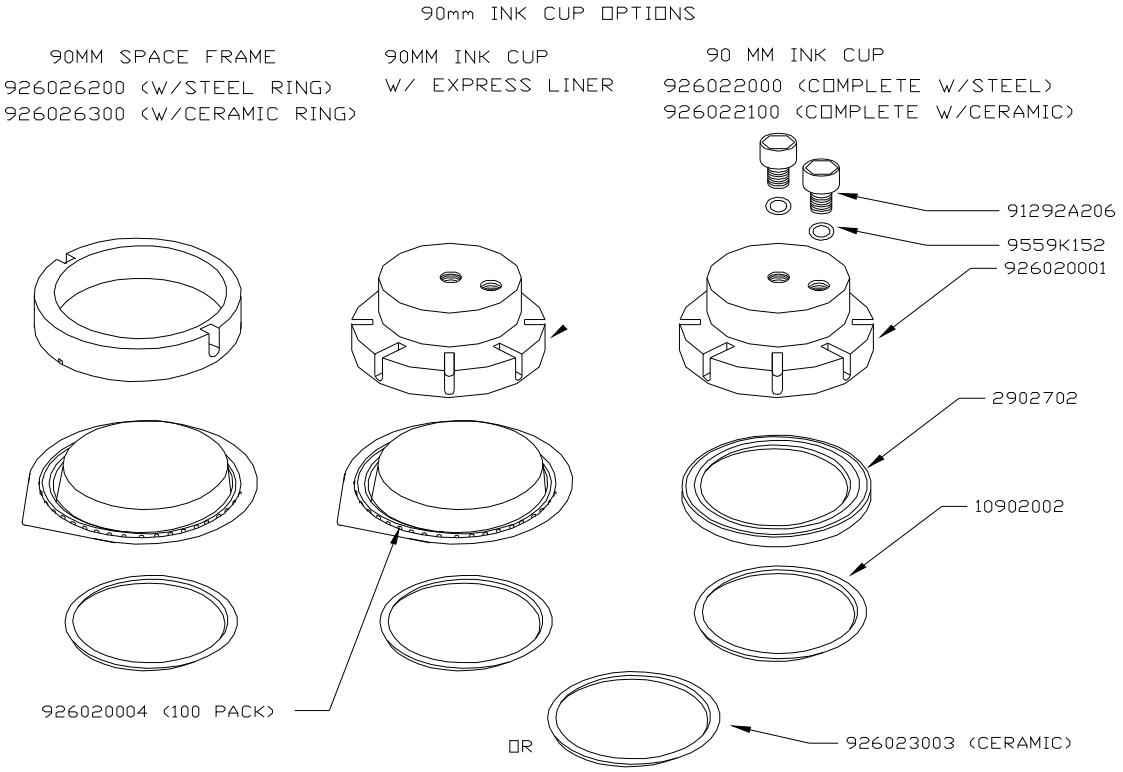
90mm INK CUP OPTIONS
90MM SPACE FRAME
926026200 (W/STEEL RING)
926026300 (W/CERAMIC RING)
90MM INK CUP
W/ EXPRESS LINER
90 MM INK CUP
926022000 (COMPLETE W/STEEL)
926022100 (COMPLETE W/CERAMIC)
91292A206
9559K152
926020001
2902702
10902002
926020004 (100 PACK)
OR
926023003 (CERAMIC)