Technical Services

Gemini 130 rev 2

Spare Parts Manual

Standard # 9642-00-000

ITW Trans Tech: Complete Pad Printing Solutions

ITW TRANS TECH • *An ITW Decorating Company* • 475 North Gary Avenue • Carol Stream, IL 60188-4900
Phone: 630.752.4000 • **Fax:** 630.752.4489 • **Web Site:** www.itwtranstech.com

For best results when printing this file, set printer to 300 dpi.

While every effort has been made to ensure the accuracy of this manual, Trans Tech cannot be held responsible for any errors or omissions. We reserve the right to make changes to technical specifications without prior notice.

ITW Trans Tech , *An Illinois Tool Works Company* • 475 North Gary Avenue • Carol Stream, IL 60188-4900
Phone: (630) 752-4000

Contents

Guarding 4
Chasis 6
Pad Ram Slide 8
Rotary Gear Rack.....10
Pneumatics 12
Electrics 14
Cup Accessories 16
Ink Cups 18

Guarding

105-00-145	magnetic plug
501-00-031	socket head cap screw
501-02-362	socket flat head cap screw
501-02-381	socket flat head cap screw
501-02-394	socket flat head cap screw
501-20-014	dowel pin
501-30-003	flat washer
501-32-020	socket flat head cap screw
501-34-005	socket button head cap screw
501-34-006	socket button head cap screw
501-34-010	socket button head cap screw
501-34-036	socket button head cap screw
521-30-002	nut
531-30-006	socket button head cap screw
541-00-013	t-nut M6
601-01-004	end cap
601-01-012	hinge, steel
601-05-140	knob, black
601-10-005	cabinet hinge
9632-60-002	magnetic door catch
9632-60-003	door catch
9632-60-004	door spacer
9632-60-013	left hand vertical profile
9632-60-016	right hand vertical profile
9640-60-018	horizontal item, right hand
9640-60-019	rear joining plate
9640-60-020	front joining plate
9642-60-005	lexan guard, right hand
9642-60-008	lexan guard, left hand
9642-60-010	front side guard
9642-60-012	side guard
9642-60-014	horizontal item, left hand
9642-60-015	horizontal item, front, left hand
9642-60-017	horizontal item, front, right hand
9642-60-021	horizontal item, rear, left hand
9642-60-022	horizontal item, rear, right hand
9642-60-027	front cover
9642-60-033	top cover
9642-60-038	back door
9640-80-035	control’s face plate

GUARDING

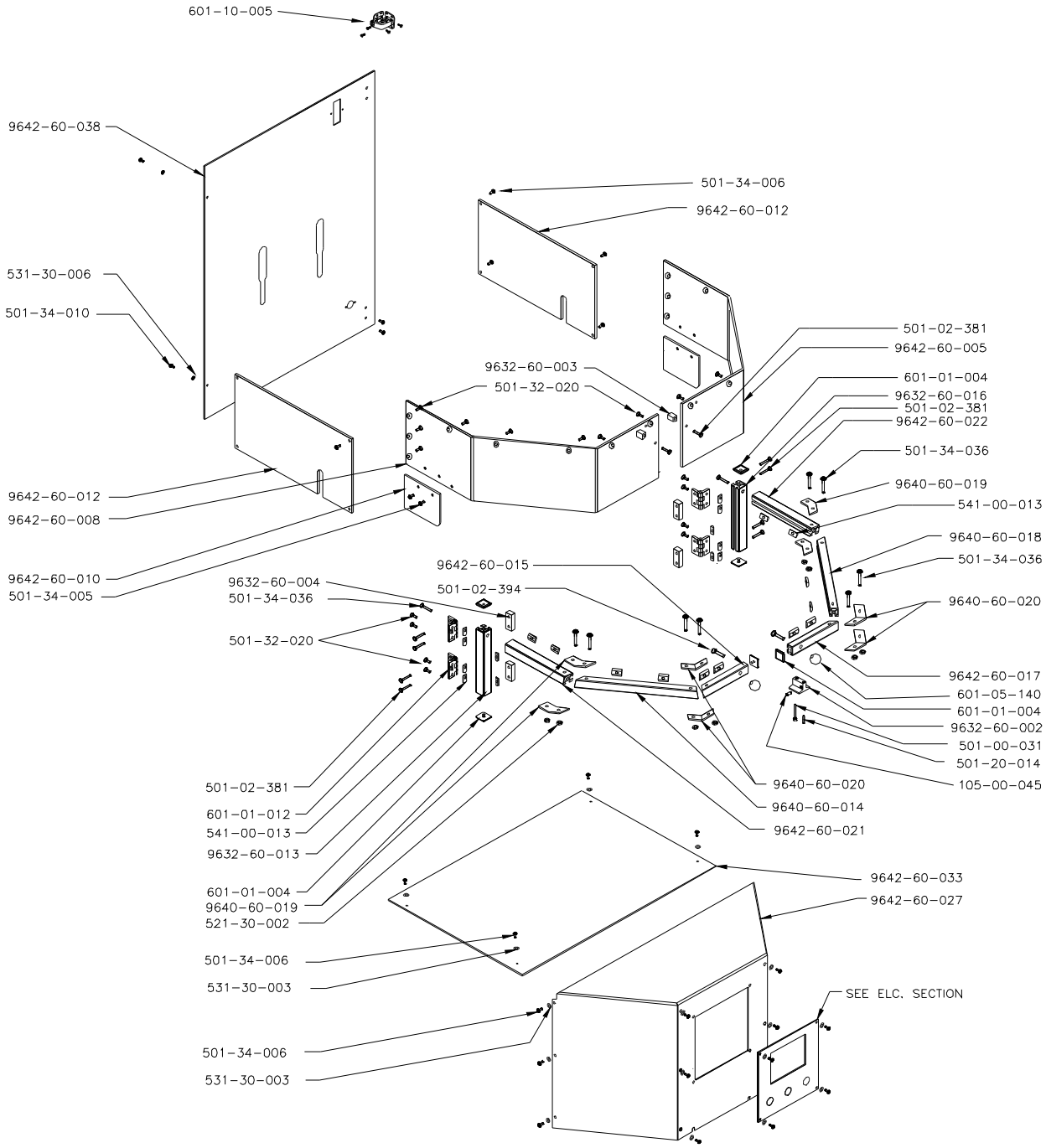
601-10-005
9642-60-038
501-34-006
9642-60-012
531-30-006
501-34-010
501-02-381
9642-60-005
601-01-004
9632-60-016
501-02-381
9642-60-022
501-34-036
9640-60-019
541-00-013
9640-60-018
501-34-036
9640-60-020
9632-60-003
501-32-020
9642-60-012
9642-60-008
9642-60-010
501-34-005
9642-60-015
501-02-394
9632-60-004
501-34-036
501-32-020
9642-60-017
601-05-140
601-01-004
9632-60-002
501-00-031
501-20-014
105-00-045
9640-60-020
9640-60-014
9642-60-021
501-02-381
601-01-012
541-00-013
9632-60-013
601-01-004
9640-60-019
521-30-002
9642-60-033
9642-60-027
501-34-006
531-30-003
SEE ELC. SECTION
501-34-006
531-30-003

Chassis

090-03-065	BUMPER, RUBBER
090-13-002	VIBRATION PAD
090-13-004	ADJUSTABLE LEVELERS (FEET)
103-18-401	SPACER-3/8" DIA. X 1/2" LG.
230-00-040	SHOCK ABSORBER
501-00-005	SHCS M3 X 12
501-00-018	SHCS 4MM X 30
501-00-074	SHCS 8MM X 100
501-00-098	SHCS M10 X 100
501-20-030	DOWEL PIN M8 X 30
501-30-018	M4 X 70 SHCS ZP
501-30-024	M4 X 35 SHCS ZP
501-30-044	M6 X 30 SHCS ZP
501-30-063	M8 X 30 SHCS ZP
501-30-072	SLHCS M6 X 20 ZP
501-30-090	SHCS M10 X 40 ZP
521-30-005	4MM NUT
522-30-008	HEX NUT 3/4-10 ZP
531-30-005	4MM WASHER
532-30-009	FLATWASHER 3/4" NOM.
541-04-051	M8 X 28 PULL-OUT DOWEL PIN
9632-50-014	FLOW CONTROL BRACKET
9640-01-024	SCREW ADJUST
9640-01-025	CONFINEMENT SCREW
9640-01-026	CONFINEMENT SCREW
9642-50-001	STIFFENER/SUPPORT
9642-50-002	PLATE - TOP
9642-50-003	UPPER SUPPORT/BRACKET
9642-50-004	PLATE - SIDE
9642-50-005	PLATE - BOTTOM
9642-50-006	FACE PLATE, KNEE
9642-50-007	BASE SUPPORT
9642-50-008	FOOT/PRINTER SUPPORT
9642-50-009	SHOCK BLOCK
9642-50-010	STOP BLOCK – FRONT
9642-50-012	STIFFENER/SUPPORT SHIM
9642-50-013	BACK PLATE – KNEE
9642-50-014	TOP PLATE – KNEE
9642-50-015	GUSSET – KNEE
9642-50-016	GUIDE RAIL MOUNT
9642-50-017	GUIDE RAIL
9642-50-018	SAFETY STOP
9642-50-023	BAR “X” - ADJUST
9642-50-030	ELECTRICAL PANEL
9642-50-040	COLLAR STOP – SHOCK (EARLY ONLY)

CHASSIS

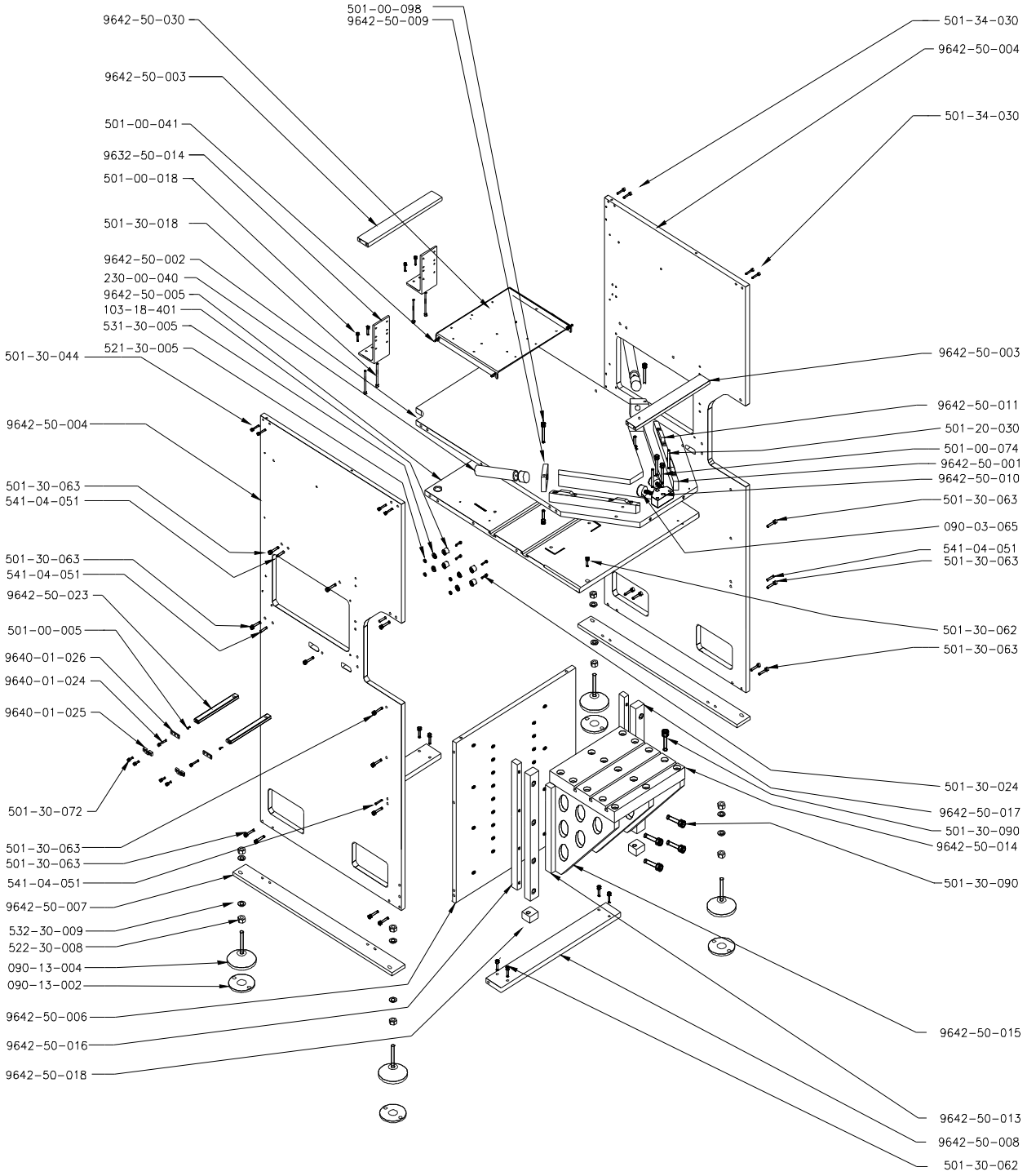
9642-50-030
501-00-098
9642-50-009
501-34-030
9642-50-004
9642-50-003
501-34-030
501-00-041
9632-50-014
501-00-018
501-30-018
9642-50-002
230-00-040
9642-50-005
103-18-401
531-30-005
521-30-005
501-30-044
9642-50-003
9642-50-011
9642-50-004
501-20-030
501-00-074
9642-50-001
9642-50-010
501-30-063
541-04-051
501-30-063
090-03-065
541-04-051
501-30-063
501-30-063
541-04-051
9642-50-023
501-30-062
501-00-005
501-30-063
9640-01-026
9640-01-024
9640-01-025
501-30-024
501-30-072
9642-50-017
501-30-090
9642-50-014
501-30-063
501-30-063
541-04-051
501-30-090
9642-50-007
532-30-009
522-30-008
090-13-004
090-13-002
9642-50-006
9642-50-015
9642-50-016
9642-50-018
9642-50-013
9642-50-008
501-30-062

Pad Ram

001-40-002	BEARING RAIL, HORIZONTAL
001-40-055	BEARING BLOCK
001-40-060	BEARING BLOCK
021-12-010	TIMING PULLEY
103-33-300	HEAGONAL ROD - ALUM
104-00-502	SPRING CONNECTOR
104-00-510	EXTENSION SPRING
201-01-120	AIR CYLINDER
205-05-230	GUIDE TUBING
209-00-300	ALIGNMENT COUPLER
303-00-003	TERIMAL, RING
352-07-025	ENCODER
501-00-064	SHCS M8 X 35
501-00-065	SHCS M8 X 40
501-00-071	SHCS M8 X 70
501-20-021	DOWEL M6 X 20
501-20-029	DOWEL M8 X 20
501-20-030	DOWEL M8 X 30
501-30-004	SHCS M3 X 8
501-30-042	SHCS M6 X 20
501-30-043	SHCS M6 X 25
501-30-063	SHCS M8 X 30
501-30-064	SHCS M8 X 35
501-30-078	SHCS M8 X 60
501-30-085	SHCS M10 X 20
501-30-090	SHCS M10 X 40
501-32-035	FHCS M6 X 60
761-00-060	RUBBER CUSHIONED STRAP
9640-02-040	TIMING BELT
9642-02-001	PLATE - PAD SLIDE - L.H. or R.H.
9642-02-003	GEAR RACK
9642-02-004	ANGLE - BRG BLOCK
9642-02-006	MOUNT - ROD COUPLER
9642-02-008	MODIFIED BEARING RAIL - VERTICAL
9642-02-009	ENCODER MOUNT
9642-02-010	PAD MOUNT BAR
9642-02-012	CABLE SUPPORT BRACKET

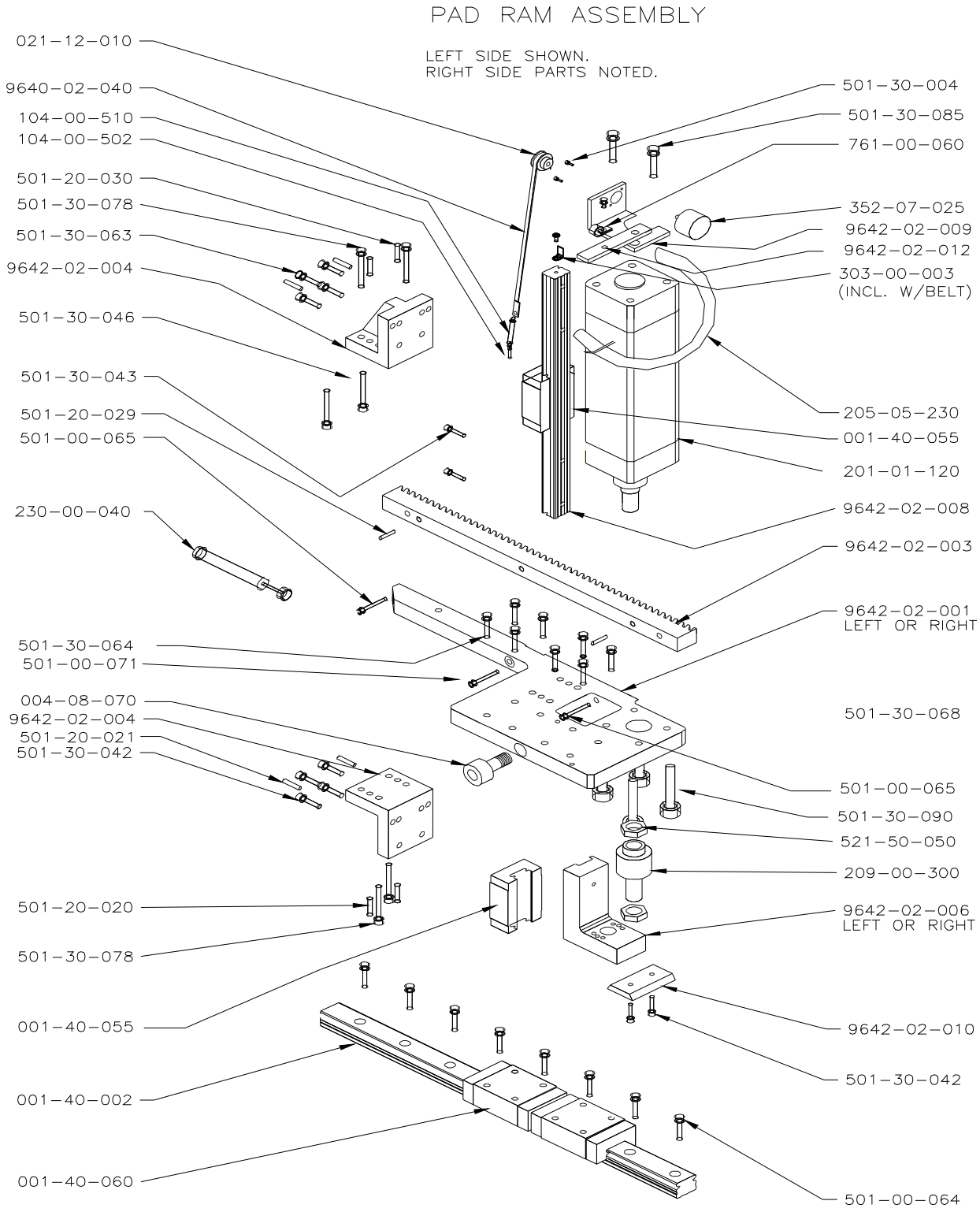
PAD RAM ASSEMBLY
LEFT SIDE SHOWN.
RIGHT SIDE PARTS NOTED.
021-12-010
9640-02-040
104-00-510
104-00-502
501-20-030
501-30-078
501-30-063
9642-02-004
501-30-046
501-30-043
501-20-029
501-00-065
230-00-040
501-30-064
501-00-071
004-08-070
9642-02-004
501-20-021
501-30-042
501-20-020
501-30-078
001-40-055
001-40-002
001-40-060
501-30-004
501-30-085
761-00-060
352-07-025
9642-02-009
9642-02-012
303-00-003
(INCL. W/BELT)
205-05-230
001-40-055
201-01-120
9642-02-008
9642-02-003
9642-02-001
LEFT OR RIGHT
501-30-068
501-00-065
501-30-090
521-50-050
209-00-300
9642-02-006
LEFT OR RIGHT
9642-02-010
501-30-042
501-00-064

ROTARY GEAR LINK

001-01-001	BALL BEARING
001-29-020	SELF-ALIGNING BALL BEARING
005-03-593	STEEL SHIM
005-03-594	STEEL SHIM
012-01-015	RETA NING RING
012-01-035	RETAINING RING
211-01-004	ROTARY ACTUATOR (SEE PNEUMATIC SECTION)
211-01-126	PROX. MTG BRACKET (SEE PNEUMATIC SECTION)
501-00-066	SHCS 8MM X 45
501-00-077	SHCS 8MM X 130
501-00-087	SHCS 10MM X 30
532-40-058	NYLON WASHER 1-1/8" OD X 7/16"ID
9642-10-006	GEAR MODIFIED
9642-10-007	PIN - LINKAGE
9642-10-008	LINK
9642-10-009	LEVER
9642-10-013	BLOCK – PIVOT
9642-10-014	PIN – PIVOT
9642-10-017	STAND OFF ROTARY ACTUATOR
9642-10-019	PIN – LINKAGE
9642-10-021	PLATE – ROTARY ACTUATOR

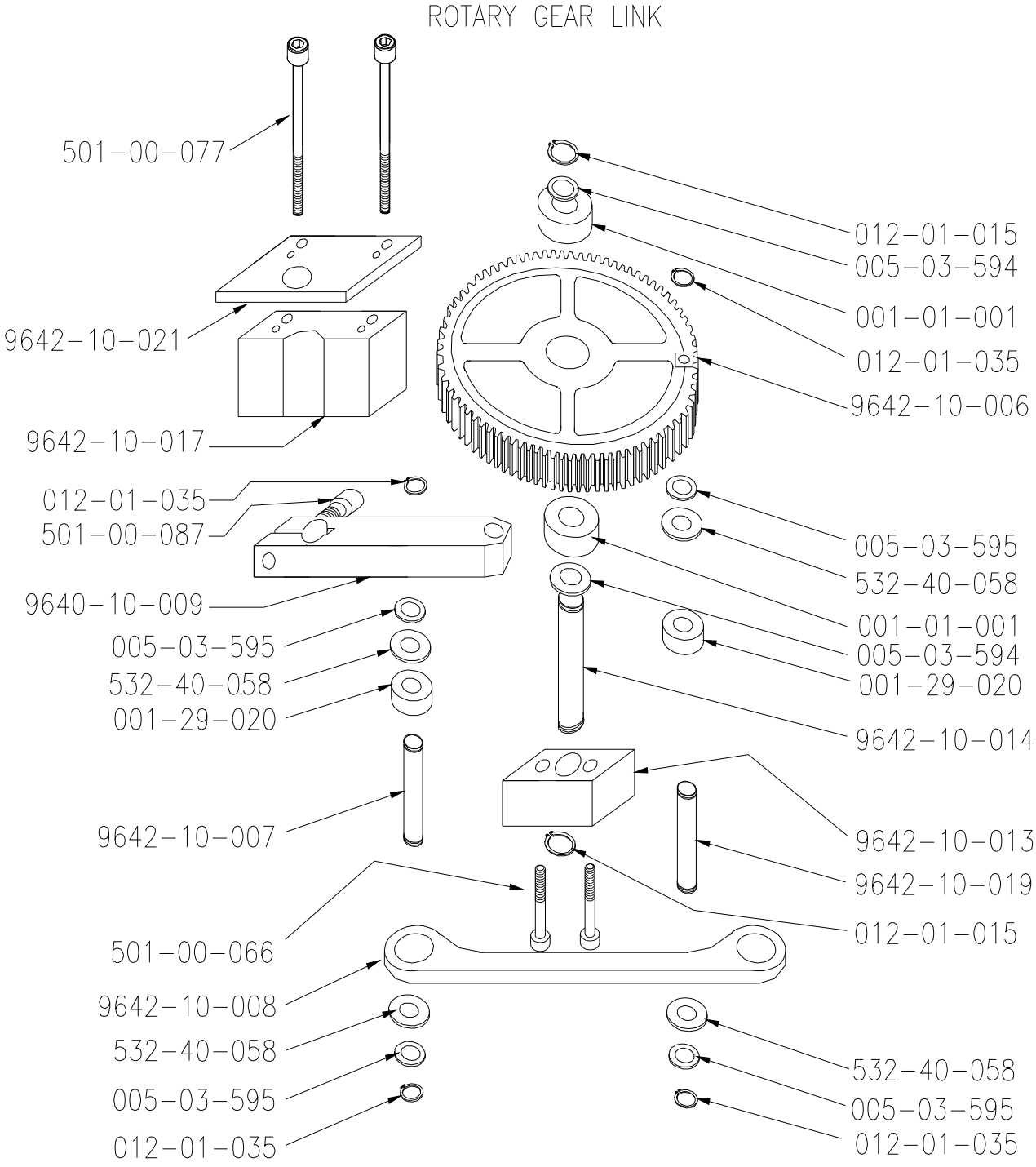
ROTARY GEAR LINK
501-00-077
9642-10-021
9642-10-017
012-01-035
501-00-087
9640-10-009
005-03-595
532-40-058
001-29-020
9642-10-007
501-00-066
9642-10-008
532-40-058
005-03-595
012-01-035
012-01-015
005-03-594
001-01-001
012-01-035
9642-10-006
005-03-595
532-40-058
001-01-001
005-03-594
001-29-020
9642-10-014
9642-10-013
9642-10-019
012-01-015
532-40-058
005-03-595
012-01-035

Pneumatics

FO163189	valve, pad ram up/down
FO163190	valve, pad front/back, cliché in/out
FO163191	valve, spare, 2 pos. single solenoid
103-18-401	unthreaded spacer
202-01-034	filter/regulator valve
202-01-067	valve terminal
202-01-080	soft start valve
202-01-081	main on/off electric valve
202-01-090	1-way flow control valve
202-01-091	1-way flow control valve
202-01-120	cylinder
202-01-177	non-return (check) valve
203-01-050	pressure gauge
203-01-100	sub-base, left
203-01-101	sub-base, right
204-01-062	silencer
204-01-094	adaptor
204-01-174	double nipple
204-01-206	elbow fitting
204-01-212	push-in L-fitting
204-01-216	push-in fitting
204-01-218	Multiple distributor
204-01-225	push-in fitting
204-01-232	push-in fitting
204-01-301	push-in L-fitting
204-07-051	hose coupling plug
205-01-006	hose, 6mm, solid blue, per foot
205-08-057	hose, 1/2", transparent yellow, per foot

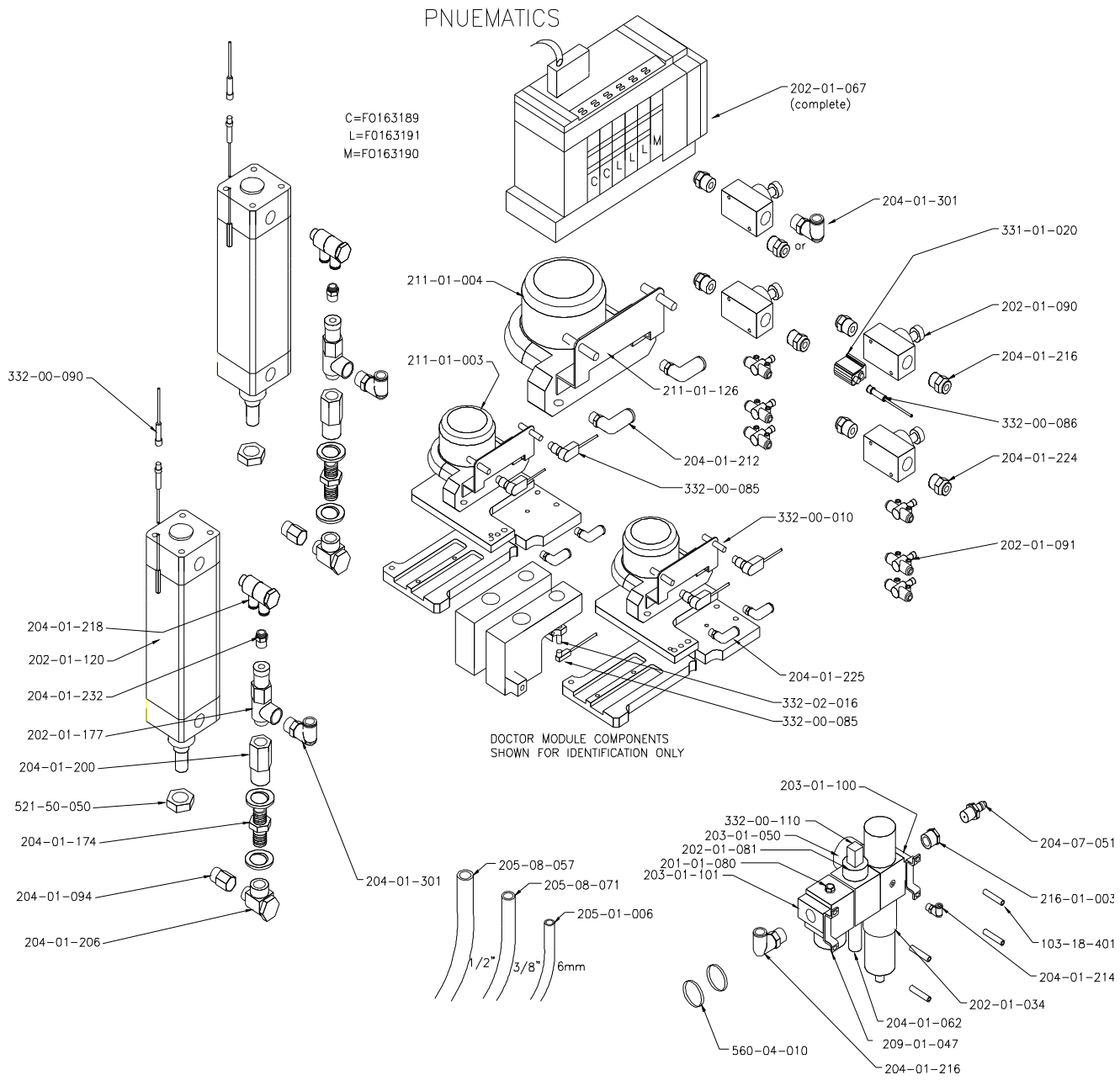
PNUEMATICS
C=F0163189
L=F0163191
M=F0163190
C
C
L
L
L
M
202-01-067
(complete)
204-01-301
or
331-01-020
211-01-004
202-01-090
211-01-003
204-01-216
332-00-090
211-01-126
332-00-086
204-01-212
204-01-224
332-00-085
332-00-010
202-01-091
204-01-218
202-01-120
204-01-232
204-01-225
332-02-016
332-00-085
202-01-177
DOCTOR MODULE COMPONENTS
SHOWN FOR IDENTIFICATION ONLY
204-01-200
521-50-050
204-01-174
204-01-094
204-01-206
204-01-301
205-08-057
205-08-071
205-01-006
1/2"
3/8"
6mm
203-01-100
332-00-110
203-01-050
202-01-081
201-01-080
203-01-101
204-07-051
216-01-003
103-18-401
204-01-214
202-01-034
204-01-062
209-01-047
560-04-010
204-01-216

Electrical

302-02-008	wireway
302-02-016	wireway cover
303-01-002	terminal block
303-01-007	earth ground terminal
303-01-008	jumper
303-01-016	end barrier
305-12-010	power cord
312-08-015	suppressor, 115vac
312-17-010	power supply, 24v, 50w
321-06-201	plc backup battery
322-03-001	foot switch receptacle
322-05-010	plug, connector (9 contact)
322-05-039	contact socket
322-05-044	cable clamp
331-19-001	magnetic guard door switch
333-03-008	green pushbutton, with contact block
333-03-009	red pushbutton, with contact block
333-03-013	red mushroom head pushbutton
333-03-022	contact block, n.o.
343-00-011	relay socket
343-00-017	relay
353-01-010	fuse, 5 amp
354-02-025	main disconnect switch
361-24-004	PLC – Touchscreen communication cable
369-12-010	resistor, 3.3k ohm
369-13-010	capacitor
391-60-005	cable, 7 conductor, per foot
392-01-001	din rail, per foot,
9640-80-001	programmed touch screen
9642-80-001	programmed PLC (programmable logic controller)

Electrical Panels

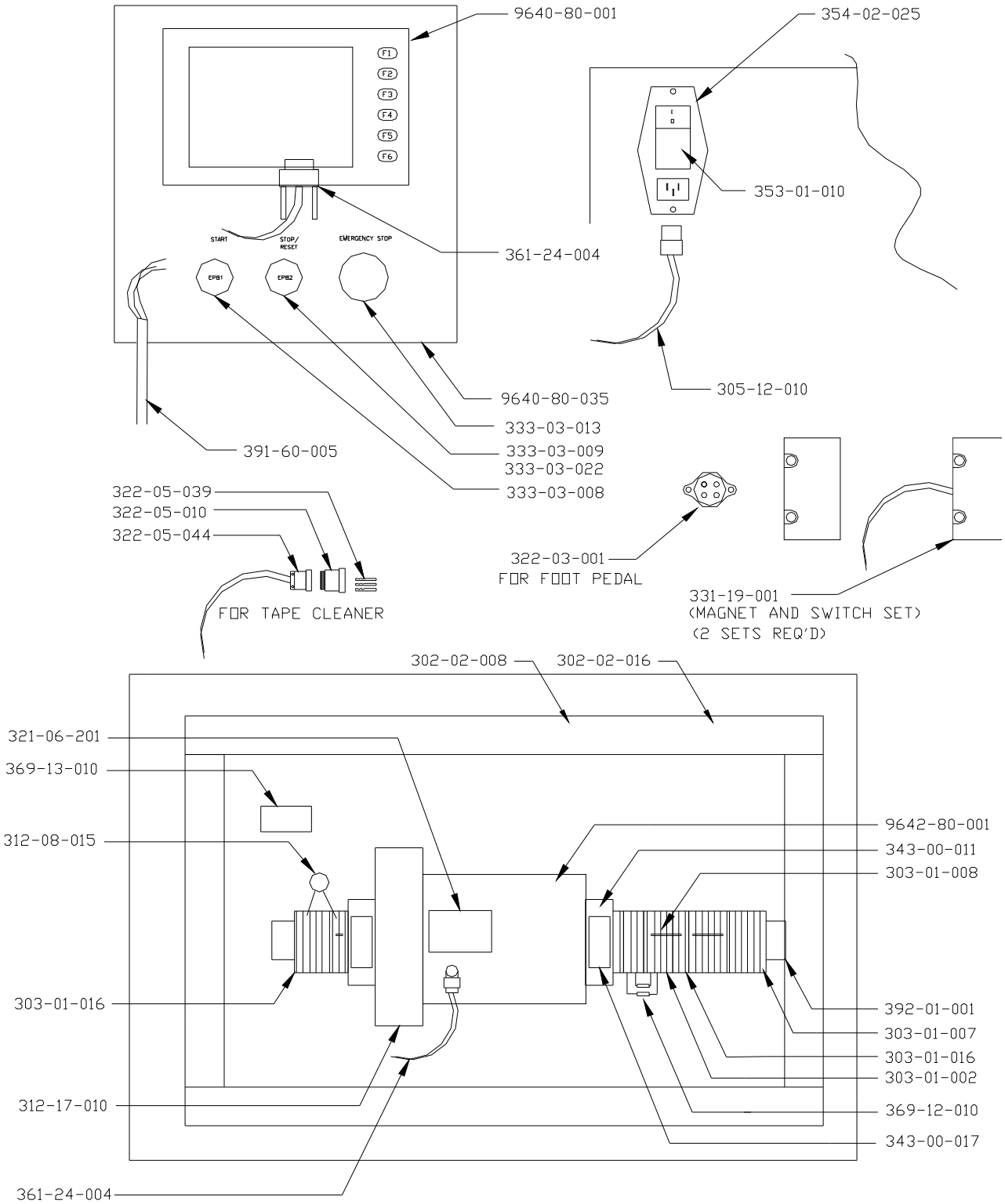

130MM SETUP TABLE – 9260-33-000

090-03-003	BUMPER (RECESS),
501-00-030	SOCKET HEAD CAP SCREW M5 X 30
501-04-496	SOCKET BUTTON HEAD CAP M5 X 12
501-20-029	DOWEL PIN M8 X 20
502-20-170	DOWEL PIN 1/4 X 3/8
9260-30-007	TOP PLATE, SETUP TABLE, 60MM CUP
9260-10-008	LEG

130MM SETUP TOOL – 9260-34-000

104-12-084	EXTENSION SPRING .313X1.025X.037
501-02-362	SOCKET F-HEAD CAP SCREW M5 X 12
501-20-009	DOWEL PIN M4 X 30
9260-10-009	YOKE BLOCK 60, 90, 130
9260-10-012	CAM 60, 90, 130
9260-30-008	TONGUE 130MM CUP
9260-30-009	YOKE 130MM CUP
9309K12	PADS

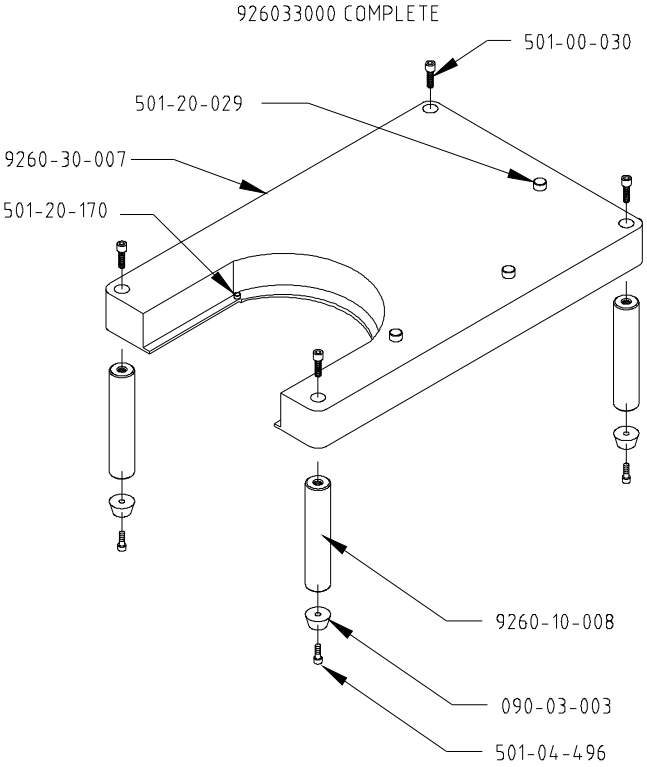
926033000 COMPLETE
501-00-030
501-20-029
9260-30-007
501-20-170
9260-10-008
090-03-003
501-04-496

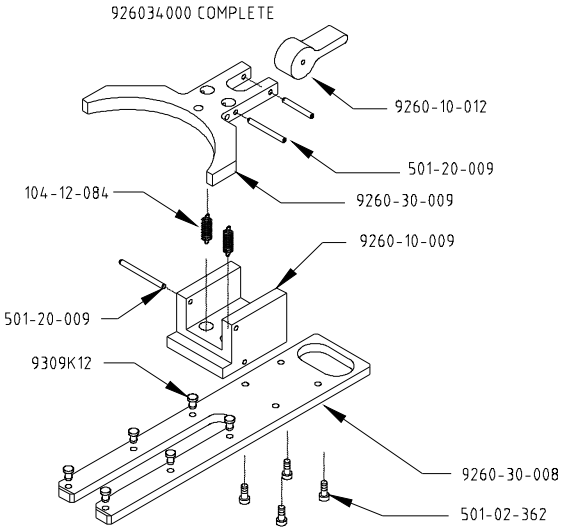
926034000 COMPLETE
9260-10-012
501-20-009
104-12-084
9260-30-009
9260-10-009
501-20-009
9309K12
9260-30-008
501-02-362

130mm INK CUP OPTIONS

2903702	Seal For 130mm Doctor Ring
10905002	130mm Steel Doctor Ring
926030002	130mm Ceramic Doctor Ring
926030003	Express Liner, 130mm (100 Pack)
926020001	Redstar Multicup, 130mm W-Steel Ring
926032100	Redstar Multicup, 130mm W-Ceramic Ring
926038000	Space Frame Assy, 130mm Mechanical W- Carbide Ring
926038100	Space Frame Assy, 130mm Mechanical W- Ceramic Ring
91292A206	Vent Screw
9559K152	Screw Seal

130mm INK CUP OPTIONS
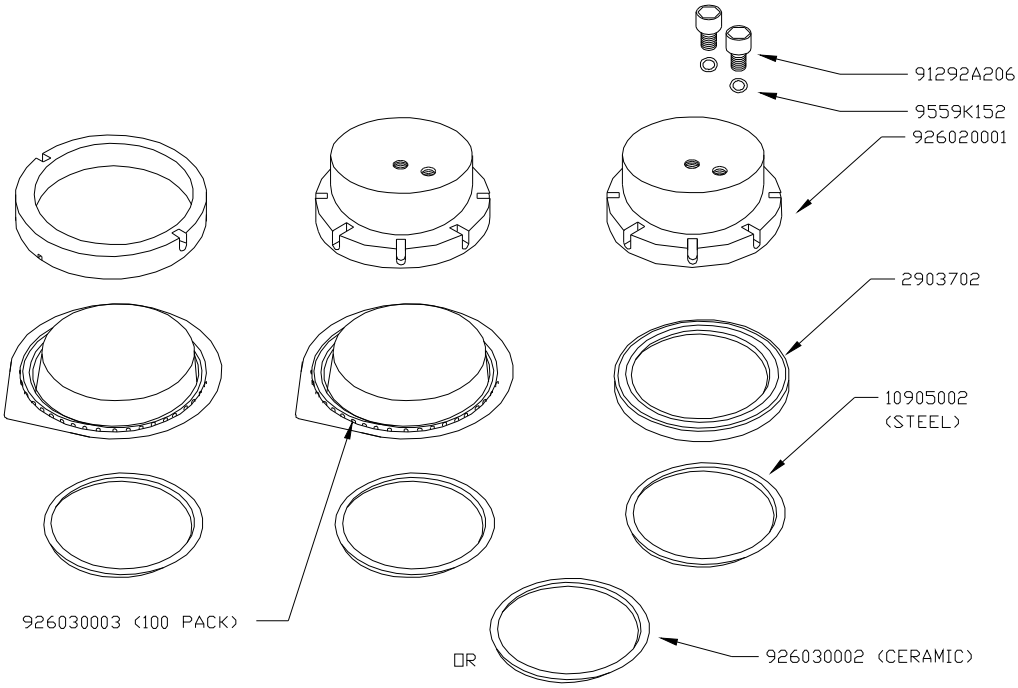
130MM SPACE FRAME	130MM INK CUP	130 MM INK CUP
926038000 (W/STEEL RING)	W/ EXPRESS LINER	926032000 (COMPLETE W/STEEL)
926038100 (W/CERAMIC RING)		926032100 (COMPLETE W/CERAMIC)