MBM2840 Exposure Unit

User's Manual

Trans Tech: Complete Pad Printing Solutions

TRANS TECH AMERICA Inc. • *An ITW Decorating Company* • 475 North Gary Avenue • Carol Stream, IL 60188-4900
Phone: 630.752.4000 • **Fax:** 630.752.4489 • **Web Site:** www.itwtranstech.com

Contents

Operating instructions 3
Base and Control 4
Exposure Frame and Bed 6
Cover and Lamps 8
Electrical Schematic 10

Note[1]: 5/32” x .400” should be substituted.
Note[2]: 3/16” x .425” should be substituted.
May be obtained from your local hardware supplier.

Note[3]: Although the supply voltage to the exposure unit is 110V, the input voltage to the control circuit of the timer (TR1, terminals 5 & 6) may be either 110V or 220V. The replacement timer requires 110V. If the existing timer is wired for 220V, the transformer (T1) must be eliminated from the circuit when installing the 110V timer.

For best results when printing this file, set printer resolution to 300 dpi.

While every effort has been made to ensure the accuracy of this manual, Trans Tech cannot be held responsible for any errors or omissions. We reserve the right to make changes to technical specifications without prior notice.

Instructions for operating the exposure unit.

Please see the instructions that accompany the temporary plate material for a step by step exposure procedure.

Always handle unexposed plate material under a safelight source (protected from exposure to UV light).

General instructions are as follows:

1 Remove the clear protective film from the colored side of a single cliche.
2 Clean both sides of the film positive.
3 Open the exposure frame and place cliche, colored side up, in the center of the bed.
4 Place the film positive on top of the cliche (right reading, emulsion side down).

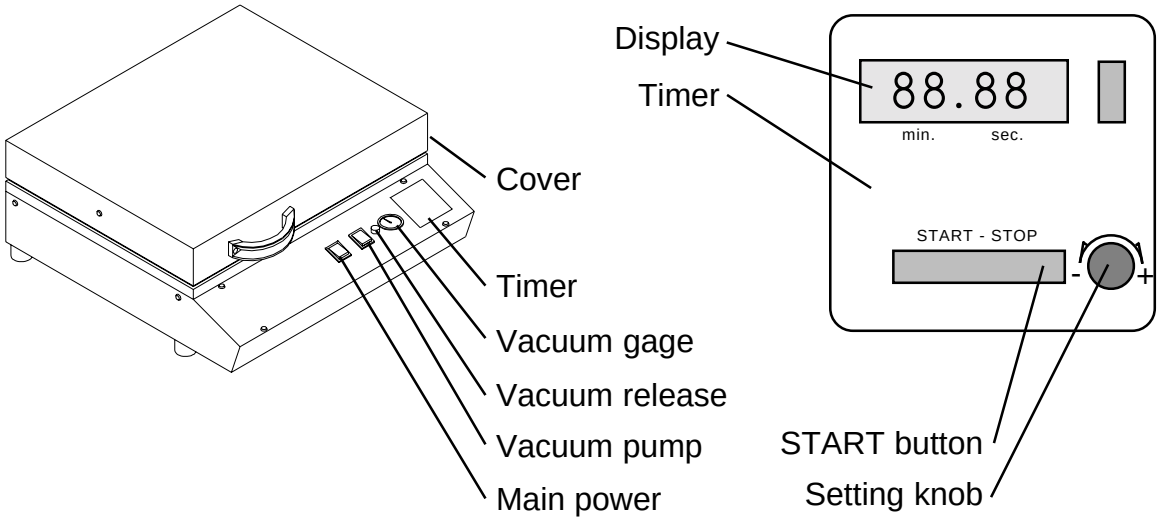

5 Close the exposure frame over the film positive and cliche. Make sure the film and cliche stay properly aligned.
6 Turn on main power switch.
7 Turn on vaccum pump switch and wait until exposure frame acetate is pulled down tightly over the film and cliche. It may be necessary to press down on the front of the exposure frame to obtain a vacuum seal. The vacuum gage should read near the center of the green band.
8 Close the cover completely.
9 Turn the setting knob on the timer to the setting specified for your plate material. Exposure times will vary and should be comfirmed regularly by checking with a 21 step gray scale.
10 Press the START button. The timer will count down to zero and beep when finished.
11 Open the cover and turn off the vacuum pump.
12 Press and hold the vacuum release button to release the vacuum.
13 Lift the exposure frame and remove the cliche plate and film.
14 Turn off the main power switch.

Base and Control

Item	Part Number	Description
1.1	90100570	Transformer
1.2	90100571	Ballast
1.3	90100572	Panel
1.4	See 1.36	Hose (70mmOAL)
1.5	90100574	Muffler
1.6	See 1.36	Hose (200mmOAL)
1.7	See 1.36	Hose (180mmOAL)
1.8	90100577	Tee fitting
1.9	90100578	Enclosure
1.10	See 1.36	Hose (215mmOAL)
1.11	90100580	Terminal block
1.12	92100002	Pump and motor
1.13	90100581	Connector
1.14	90100582	Flexible conduit
1.15	14230221	Power cord
1.16	See 1.36	Hose (45mmOAL)
1.17	90100584	Filter
1.18	See 1.36	Hose (260mmOAL)
1.19	90100586	Tee fitting
1.20	90100587	Solenoid
1.21	90100588	Mounting bracket
1.22	50100096	SHCS M3x12
1.23	91100013	Fuse 5A
1.24	90100589	Power cord receptacle
1.25	90100590	Foot
1.26	90100591	Cover
1.27	90100328	SHCS M4x30
1.28	1423021	Timer (see note[3])
1.29	90100592	Vacuum gauge
1.30	90100593	Release switch
1.31	90100594	Rocker switch
1.32	90100594	Rocker switch
1.33	90100595	Sheet metal screw
1.34	90100596	Panel
1.35	90100591	Cover
1.36	90100573	Hose (1 meter long)

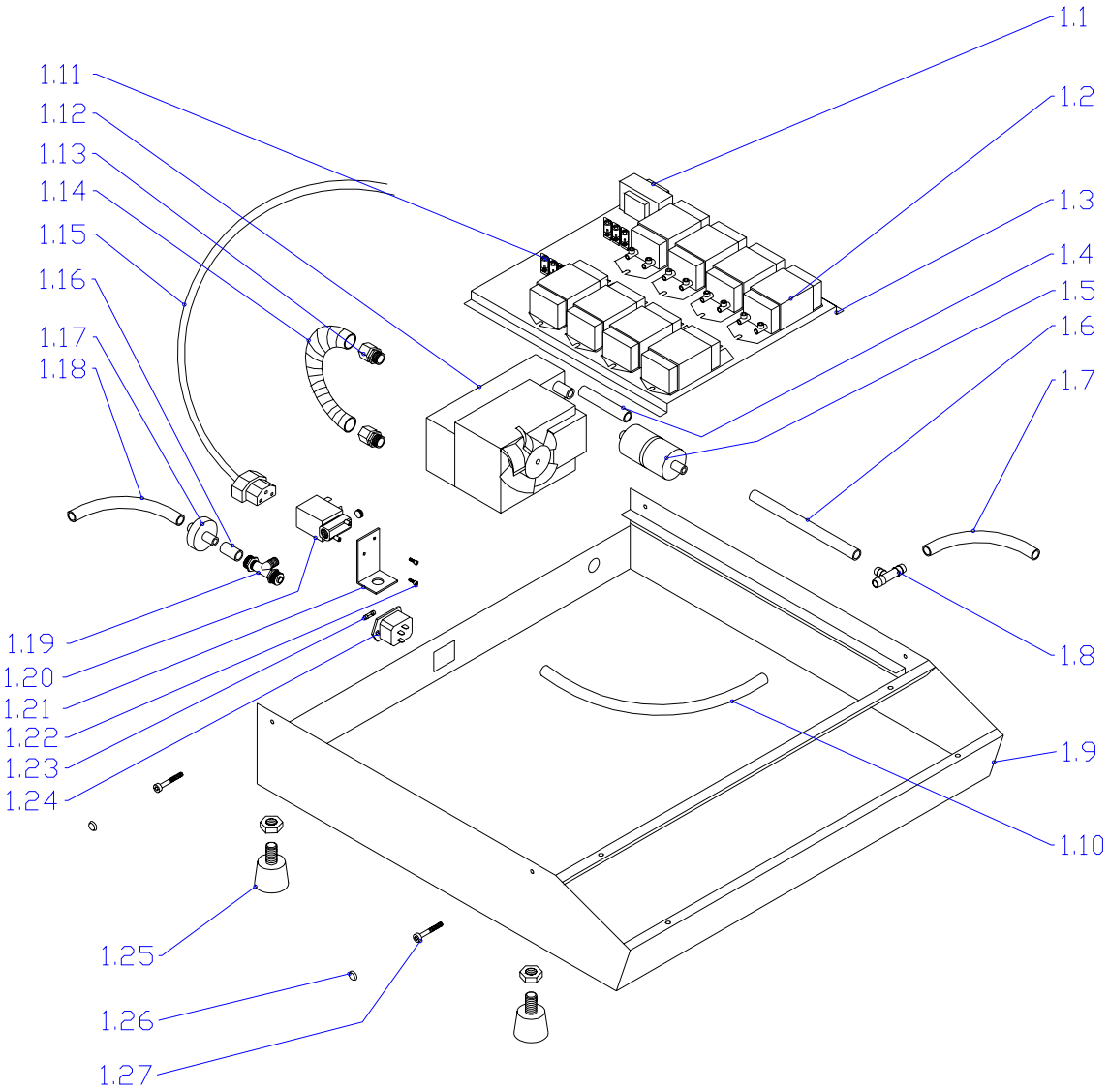
1.1
1.2
1.3
1.4
1.5
1.6
1.7
1.8
1.9
1.10
1.11
1.12
1.13
1.14
1.15
1.16
1.17
1.18
1.19
1.20
1.21
1.22
1.23
1.24
1.25
1.26
1.27

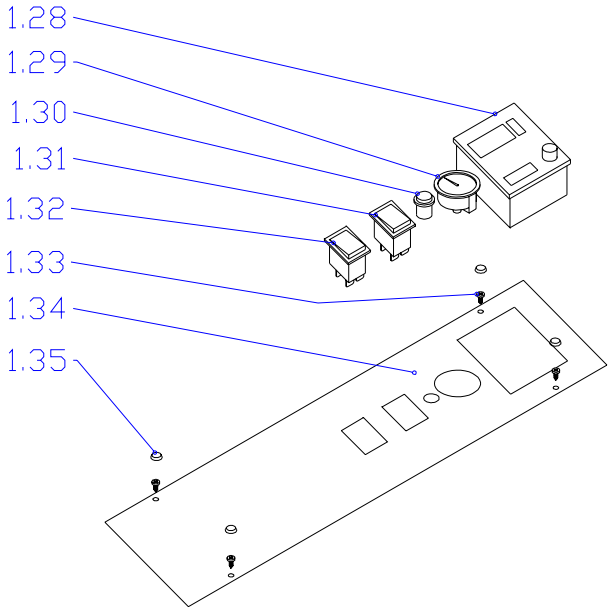
1.28
1.29
1.30
1.31
1.32
1.33
1.34
1.35

Exposure Frame and Bed

Item	Part Number	Description
2.1	90100598	Hinge
2.2	90100002	Acetate film
2.3	1410485	Double faced tape
2.4	See note[1]	Pop rivet (4x10)
2.5	90100600	Frame
2.6	90100602	Handle
2.7	90100603	Mat
2.8	90100006	Seal
2.9	90100604	Bed
2.10	90100605	Spring
2.11	90100150	Dowel pin 8x24 Din7979
2.11 alt	90100606	Flat head screw M6x40
2.12	50100220	SHCS M5x10
2.12 alt	50100053	Hex nut M6
2.13	90100606	Flat head screw M6x40
2.14	90100605	Spring
2.15	50100053	Hex nut M6
2.16	90100607	Frame
2.18	See note[1]	Pop rivet (4x10)
2.19	90100609	Connector

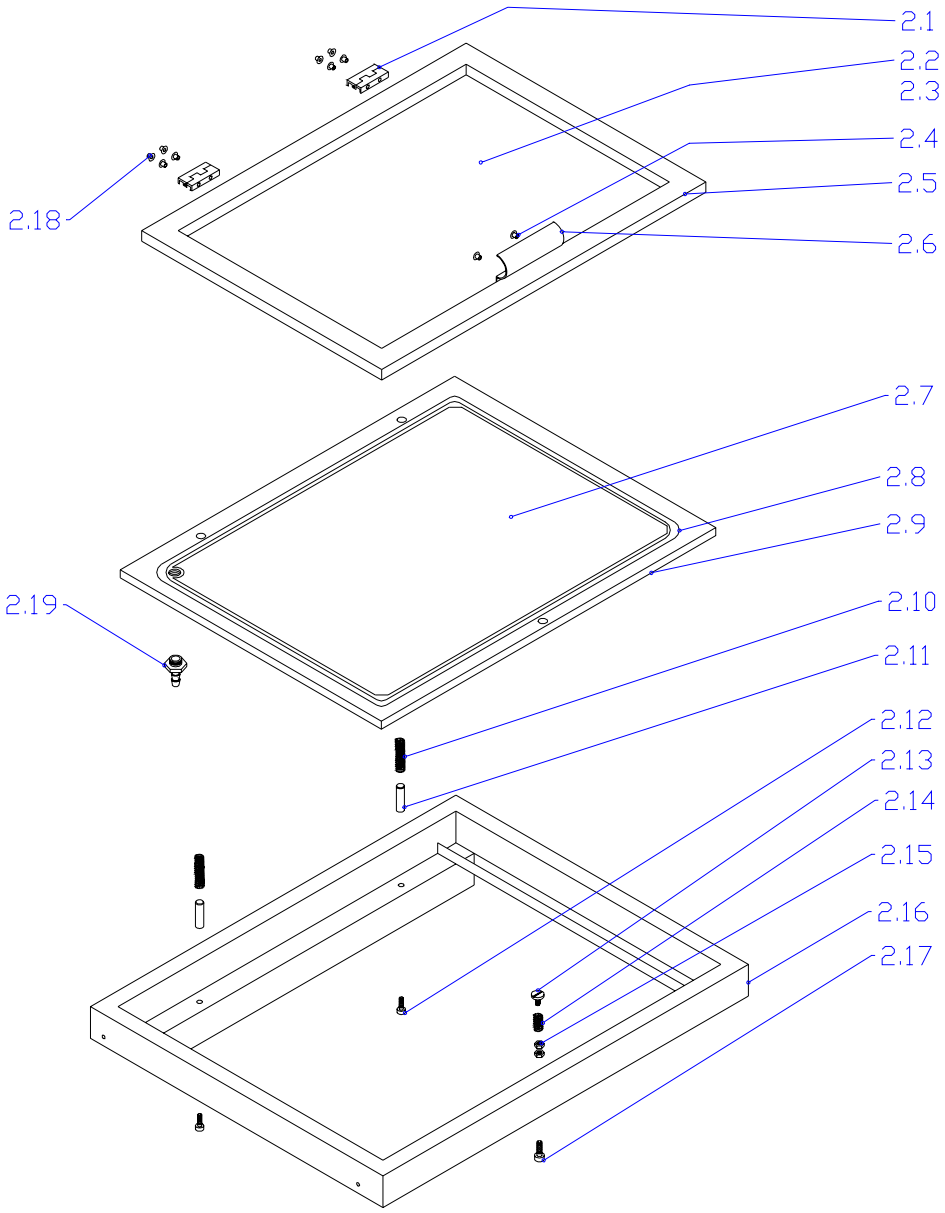
2.1
2.2
2.3
2.4
2.5
2.6
2.18
2.7
2.8
2.9
2.19
2.10
2.11
2.12
2.13
2.14
2.15
2.16
2.17

Cover and Lamps

Item	Part Number	Description
3.1	See note[2]	Pop rivet (5x10)
3.2	90100575	Hinge
3.3	90100591	Cover
3.4	See note[1]	Pop rivet (4x10)
3.5	90100579	Lamp housing
3.6	90100583	Weatherstripping
3.7	90100585	Handle (old style)
3.8	94100021	SHCS M6x16
3.9	90100597	Handle (new style)
3.10	90100599	Flat head screw M8x25
3.11	90100601	Reflector
3.12	90100608	Side rails
3.13	90100610	Lamp socket
3.14	90100576	Lamp and starter socket
3.15	1423004	Starter
3.16	14230041	Lamp

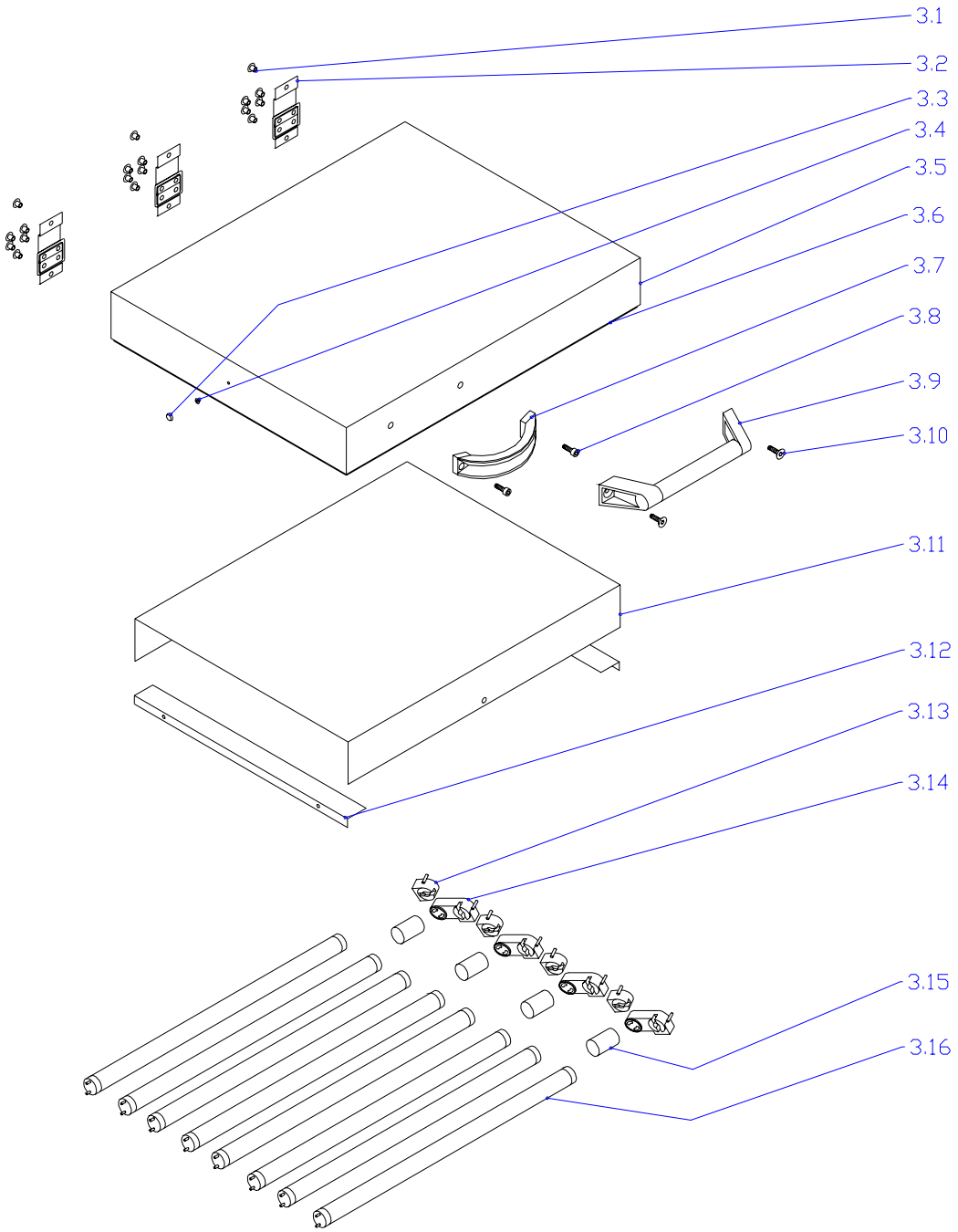
3.1
3.2
3.3
3.4
3.5
3.6
3.7
3.8
3.9
3.10
3.11
3.12
3.13
3.14
3.15
3.16
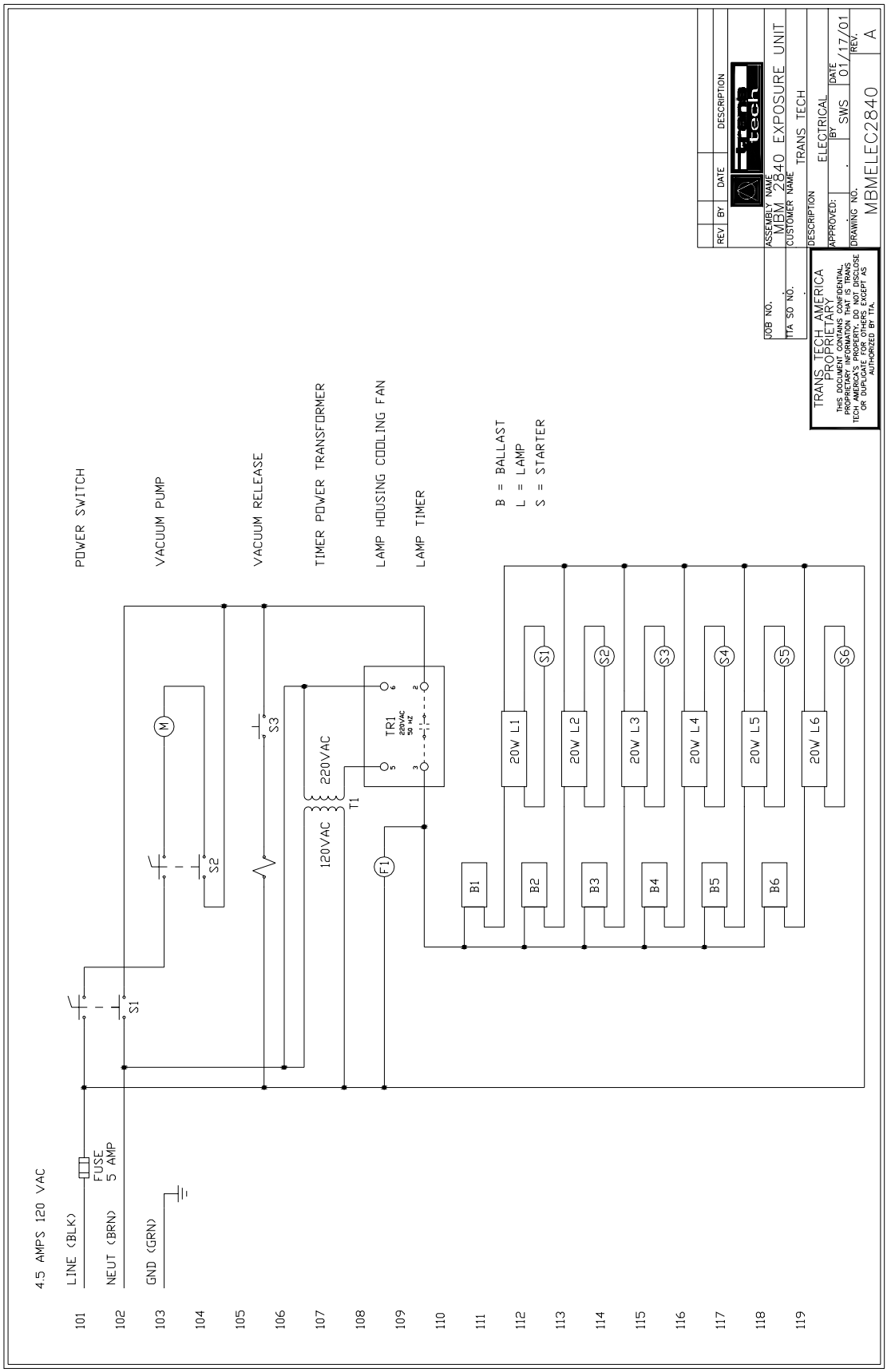
Electrical Schematic