Duoseal 90

Spare Parts Manual

Trans Tech: Complete Pad Printing Solutions

TRANS TECH AMERICA Inc. • *An ITW Decorating Company* • 475 North Gary Avenue • Carol Stream, IL 60188-4900
Phone: 630.752.4000 • **Fax:** 630.752.4489 • **Web Site:** www.itwtranstech.com

For best results when printing this file, set printer resolution to 300 dpi.

While every effort has been made to ensure the accuracy of this manual, Trans Tech cannot be held responsible for any errors or omissions. We reserve the right to make changes to technical specifications without prior notice.

Trans Tech America, Inc. *An Illinois Tool Works Company* • 475 North Gary Avenue • Carol Stream, IL 60188-4900
Phone (630) 752-4000

Duoseal 90
Spare Parts Manual

Contents

Base 4
Pad Ram and Indexer 6
Cup Drive 8
XYR Assembly 10
Cliche Holder 12
Work Knee 14
Pad Cleaning Device 16
Guards 18
Electrical and Pneumatic 20
Ink Cup 22
Recommended Spare Parts 23

Base

Item No.	Part No.	Description	W-No.
10	90100335	Base	MR119390
20	90100336	Door rear	MR119287
30	90100337	Mounting plate	MR119267
40	90100338	Supporting arm	MR119268
50	90100339	Bushing	MR109546
60	90100340	Clamp arm	MR109531
70	90100341	Cover	MR109547
80	90100342	Cover	MR109896
90	20500046	Dovetail plate	MR108658
100	90100343	Mounting plate	MR100161
110	94100026	Socket head cap screw	DIN912M8X30
120	90100309	Dowel pin	DIN7979-8M6X45
130	50100128	Socket head cap screw	DIN912M10X40
140	50100179	Low head SHCS	DIN7984M6X20
150	90100312	Low head SHCS	DIN7984M8X18
160	50100210	Dowel pin	DIN7979-8M6X20
170	90100314	Flat head SCHC	DIN7991M5X12
180	94100012	Socket head cap screw	DIN912M8X20
190	50100290	Button head screw	Din7380M5X12
200	50100218	Hex nut	DIN934M16
210	90100344	Foot	FUSS-D80
220	90100345	Grooved mat	KR44892
230	90100346	Angle	MR109335
240	90100315	Flat head SCHC	DIN7991M5X8
250	90100347	Eyebolt	DIN580M12

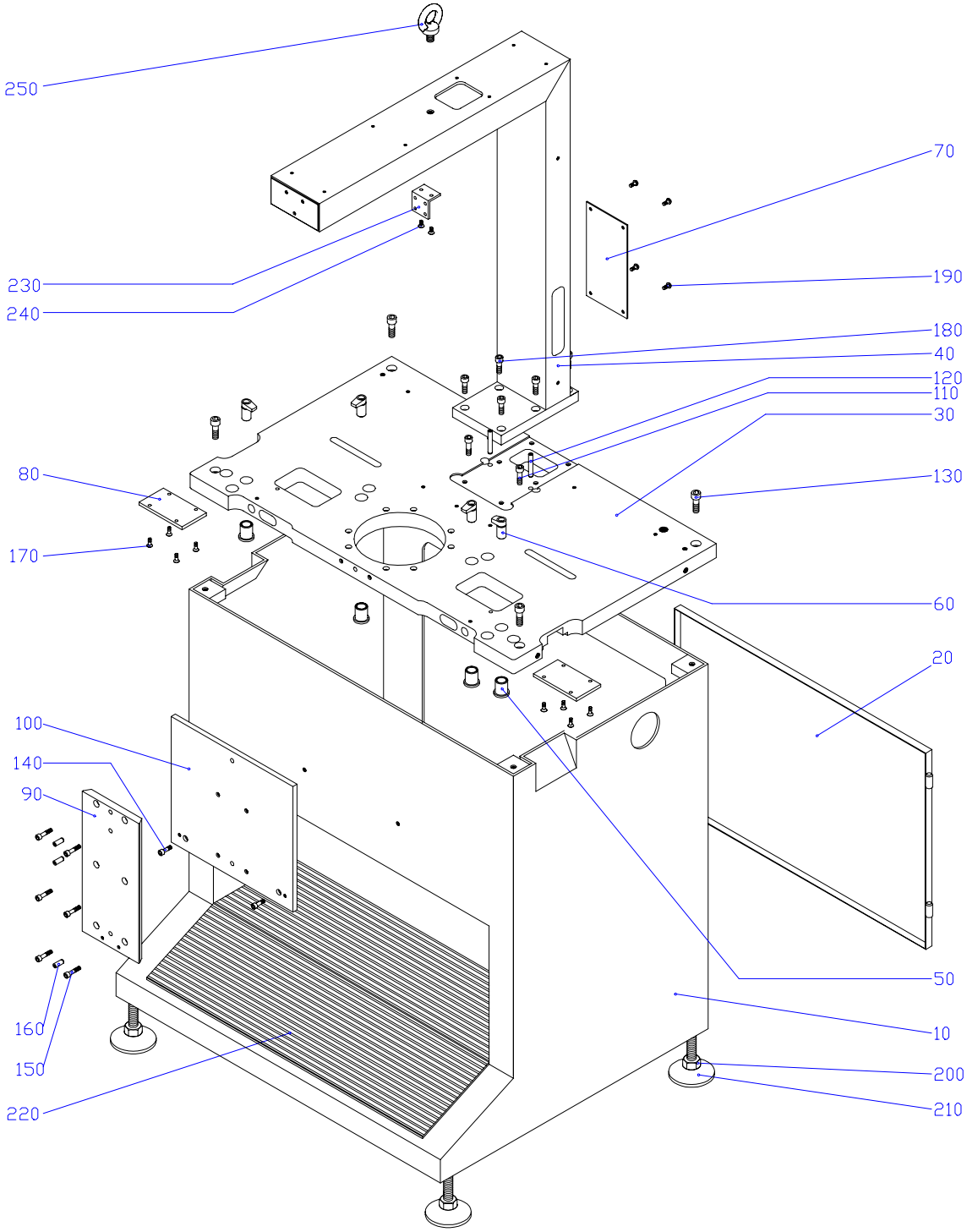
250
70
230
190
240
180
40
120
110
30
80
130
170
60
20
100
140
90
50
160
10
150
200
220
210

Pad Ram and Indexer

Item No.	Part No.	Description	W-No.
10	90100434	Bearing flange	MR119275
20	90100435	Plate	MR119277
30	90100436	Plate	MR119279
40	90100437	Slide	MR119280
50	90100438	Actuator screw	MR119290
60	90100439	Plate	MR109237
70	90100440	Block	MR109226
80	90100441	Column	MR109228
90	90100442	Flange	MR950504
110	90100443	Flange	MR109233
120	90100444	Shaft	MR100035
130	90100445	Gasket	MR109765
140	90100446	Indexer	MR109101
150	90100447	Cover	MR119273
160	90100448	Guide	MR119293
170	90100449	Holding block	MR119294
180	90100450	Shaft	MR119295
190	90100451	Plate	MR119296
200	90100452	Code strip	MR119297
210	90100453	Cover	MR119299
220	90100454	Cover	MR119300
230	90100455	Bearing rail	LATKSD25/260
240	90100456	Bearing block	LAKWSE25V2
250	90100457	Cap	LAKA11TN
260	90100458	Pneumatic cylinder	PNDNC-50-160-PP
270	90100459	Flow control	PNGRLA-1/4-QS-8
280	50100041	Washer	DIN125B6.4
290	50100245	Socket head cap screw	DIN912M6X12
300	90100317	Flat head SHCS	DIN7991M8X16
310	90100319	Set screw	DIN913M4X5
320	50100096	Socket head cap screw	DIN912M3X12
330	50100066	Socket head cap screw	DIN912M4X12
340	50100066	Socket head cap screw	DIN912M4X12
350	50100221	Socket head cap screw	DIN912M6X35
360	90100460	Bearing	DIN628-7204B
370	90100332	Nut	DIN1804M24X1.5
380	90100313	Low head SHCS	DIN7984M8X45
390	90100152	Dowel pin	DIN7979-8M6X36
400	50100195	Socket head cap screw	DIN912M8X40
410	90100329	Socket head cap screw	DIN912M4X20
420	50100055	Washer	DIN125B4.3
430	50100224	Socket head cap screw	DIN912M4X8
440	90100461	Bellows	MR119298
450	90100317	Flat head SHCS	DIN7991M8X16

Cont. on page 8

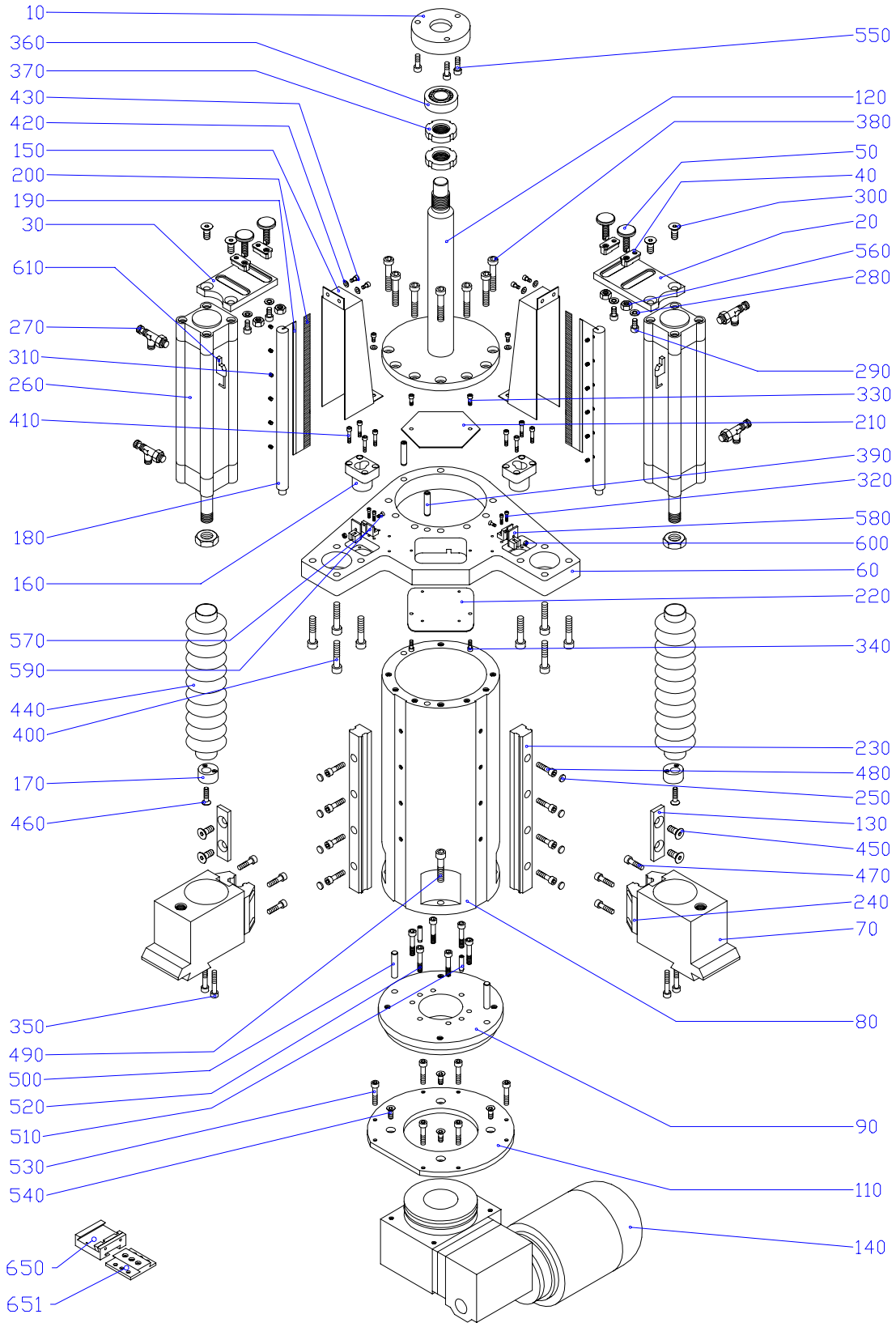
10
360
370
430
420
150
200
190
30
610
270
310
260
410
180
160
570
590
440
400
170
460
350
490
500
520
510
530
540
650
651
550
120
380
50
40
300
20
560
280
290
330
210
390
320
580
600
60
220
340
230
480
250
130
450
470
240
70
80
90
110
140

Cup Drive

Item No.	Part No.	Description	W-No.
10	90100363	Bearing block	MR109287
20	90100364	Bolt	MR109288
30	90100365	Block	MR109250
40	90100366	Shaft	MR109289
50	90100367	Shaft	MR109290
60	90100368	Lever	MR109291
70	90100369	Lever	MR109292
80	90100370	Cam roller	MR109293
90	90100371	Pneumatic cylinder	PNDSNU25-100-PP
100	90100372	Proximity switch	PNSMEO-4U-S-LED
110	90100373	Mounting clamp	PNSMBR25
120	90100374	Rod clevis	PNSG-M10X1.25
130	90100375	Flow control valve	PNGRLA-1/8-QS-6
140	90100376	Proximity switch cable	PNSIM-M8-3GD
150	50100053	Hex nut	DIN934M6
160	90100052	Bushing	BUBB1012DU
170	90100325	Roll pin	DIN7343-5X30
180	90100309	Dowel pin	DIN7979-8M6X45
190	94100026	Socket head cap screw	DIN912M8X30
200	50100097	Socket head cap screw	DIN912M6X45

Cont. from page 6

460	50112030	Flat head SHCS	DIN7991M6X20
470	94100029	Socket head cap screw	DIN912M6X25
480	94100029	Socket head cap screw	DIN912M6X25
490	50100195	Socket head cap screw	DIN912M8X40
500	90100153	Dowel pin	DIN7979-8M6X40
510	90100311	Dowel pin	DIN7979-6M6X24
520	50100097	Socket head cap screw	DIN912M6X45
530	94100018	Socket head cap screw	DIN912M6X30
540	90100173	Flat head SHCS	DIN7991M6X16
550	94100035	Socket head cap screw	DIN912M6X20
560	50100277	Hex nut	DIN934M8
570	90100462	Angle	MR950501
580	90100463	Light barrier	ELMS-LS
590	90100318	Flat head SHCS	DIN7991M3X8
600	90100331	Hex nut	DIN934M3
610	90100464	Proximity switch	PNSME-8C-SL-LED
650	12004000	Pad slide complete	
651	12004001	Pad coupler	

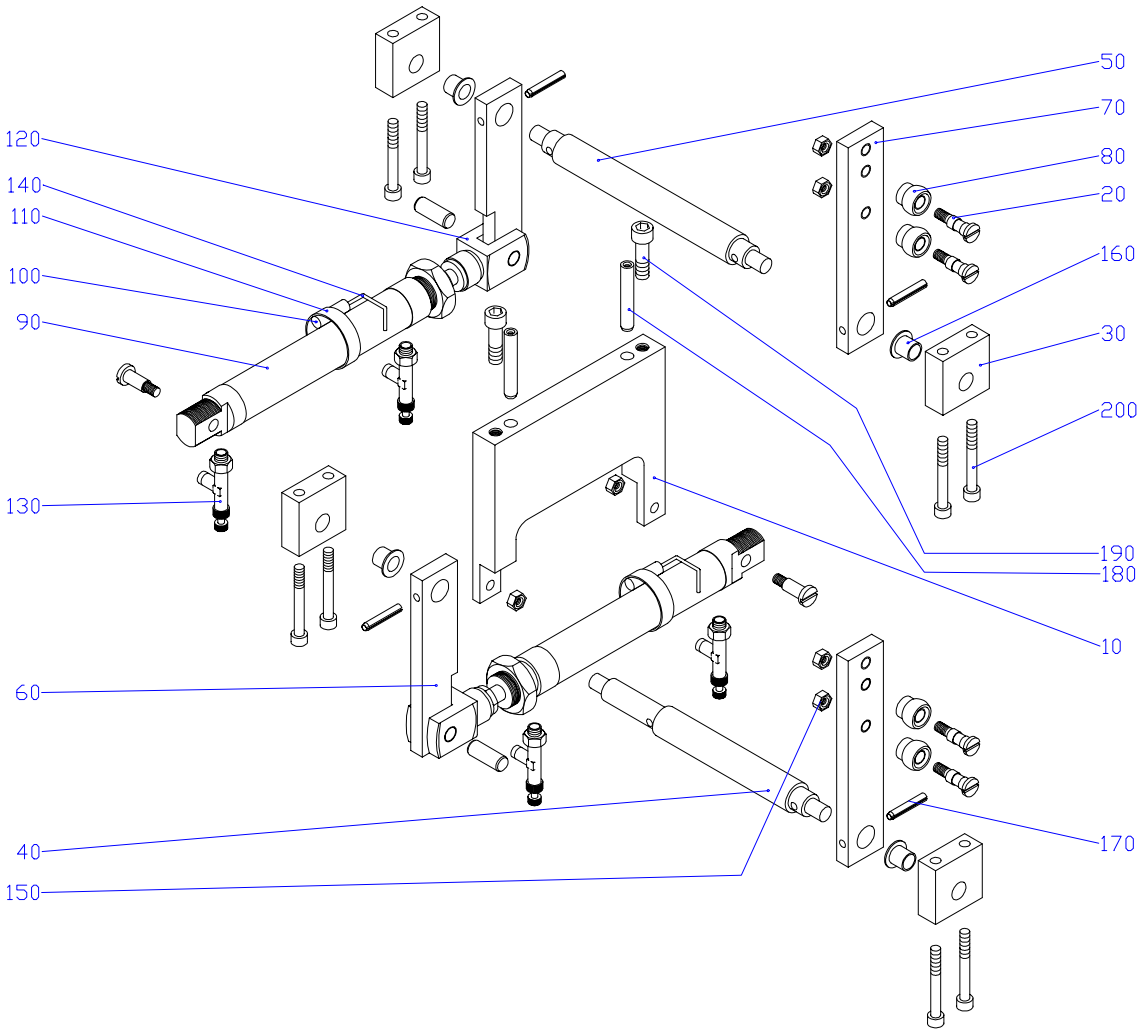
50
70
80
20
160
30
200
120
140
110
100
90
130
190
180
10
60
40
150
170

XYR Assembly

Item No.	Part No.	Description	W-No.
10	90100479	Carrier housing, L.H.	MR109386
10a	90100466	Carrier housing, R.H.	MR109549
20	90100467	Pressure screw, long	MR110085
30	30100314	Pressure screw, short	MR108680
40	90100478	Slide, Y-adjustment, L.H.	MR109297
40a	30100308	Slide, Y-adjustment, R.H.	MR106901
50	90100480	Slide, X-adjustment, L.H.	MR109388
50a	30100309	Slide, X-adjustment, R.H.	MR105450
60	90100468	Thimble, X-adjustment	MR109272
70	90100469	Spindle, X-adjustment	MR109273
80	90100470	Thimble, Y-adjustment	MR109274
90	90100471	Spindle, Y-adjustment	MR109275
100	90100472	Thimble, angular adjustment	MR109385
110	90100473	Spindle, angular adjustment	MR109400
120	30100316	Special bolt	MR108681
130	90100474	Plate	MR107856
140	20500076	Step bolt	MR108683
150	30100317	Scaled knob, angular adj.	MR105457
160	30100319	Scaled knob, X-Y-adj.	MR105458
170	94100050	Spring washer	25x12.2x0.9 DIN2093
180	90100322	Set screw	DIN914M4X6
190	90100475	Position pin	NLM3140-05
200	90100094	Bushing	BUBB0806DU
210	30100352	Bushing	BU0808DU
220	94100047	Shim	DIN988-8X14X1
230	94100046	Snap ring, external	DIN471-8X0.8
240	94100048	E-clip	DIN6799-6
250	94100049	Set screw	DIN913M4X4
260	90100323	Dowel pin	DIN7-6M6X30
270	90100476	Special screw	MR950503
280	90100322	Set screw	DIN914M4X6
290	94100030	Washer	DIN125B8.4
300	50100277	Hex nut	DIN439M8
310	50100041	Washer	DIN125B6.4
320	50100226	Socket head cap screw	DIN912M6X14

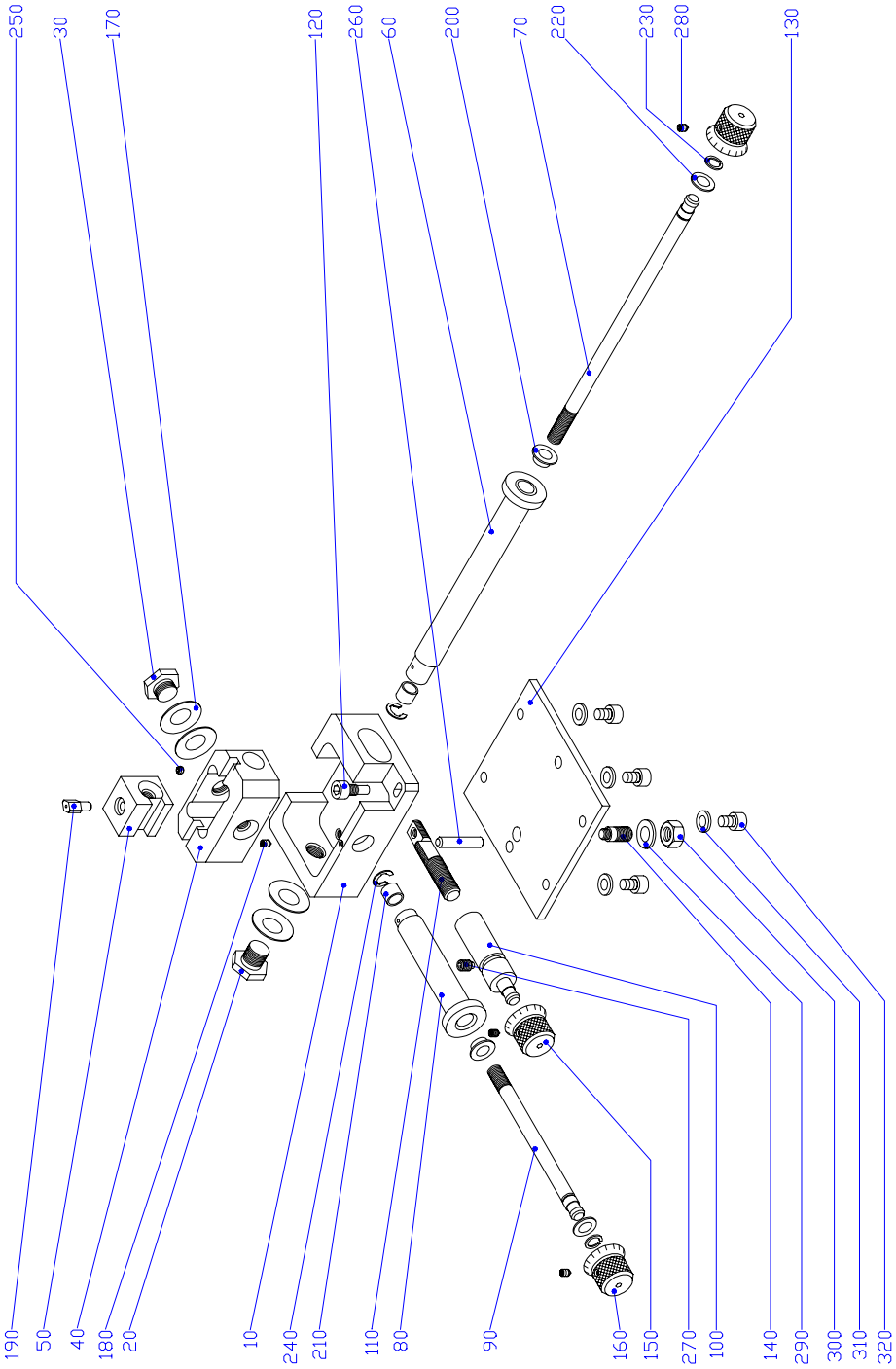
250
30
170
120
260
60
200
70
220
230
280
130
190
50
40
180
20
10
240
210
110
80
90
160
150
270
100
140
290
300
310
320

Cliche Holder

Item No.	Part No.	Description	W-No.
10	90100348	Cliche holder	MR950106
20	90100349	Slide	MR109280
30	90100350	Arm L.H.	MR950102
30	90100477	Arm R.H.	MR950101
40	90100351	Shaft	MR110087
50	90100352	Holder	MR109389
60	90100353	Step pin	MR950104
70	90100354	Stop pin	MR108956
80	90100355	Spindle	MR108957
90	90100356	Finger	MR950103
100	90100357	Grip	MR950105
110	90100358	Shaft	MR110086
120	94100041	Dowel pin	DIN6325-5M6X28
130	90100319	Set screw	DIN913M4X5
140	90100320	Dowel pin	DIN6325-3M6X16
150	90100359	Bushing	BU0810DU
160	50100252	Flat head SHCS	DIN7991M4X12
170	90100173	Flat head SHCS	DIN7991M6X16
180	94100035	Socket head cap screw	DIN912M6X20
190	50100041	Washer	DIN125B6.4
200	90100360	Knurled knob	DIN466M5
210	90100361	Shoulder screw	DIN923M6X8
220	90100362	Compression spring	FRD-142AD
230	90100321	Drill bushing	DIN179A8X10
240	90100035	Knurled screw	DIN653M6X20
250	50100201	Ball plunger	GN615-M6-KS
260	90100324	Nut	DIN439M6

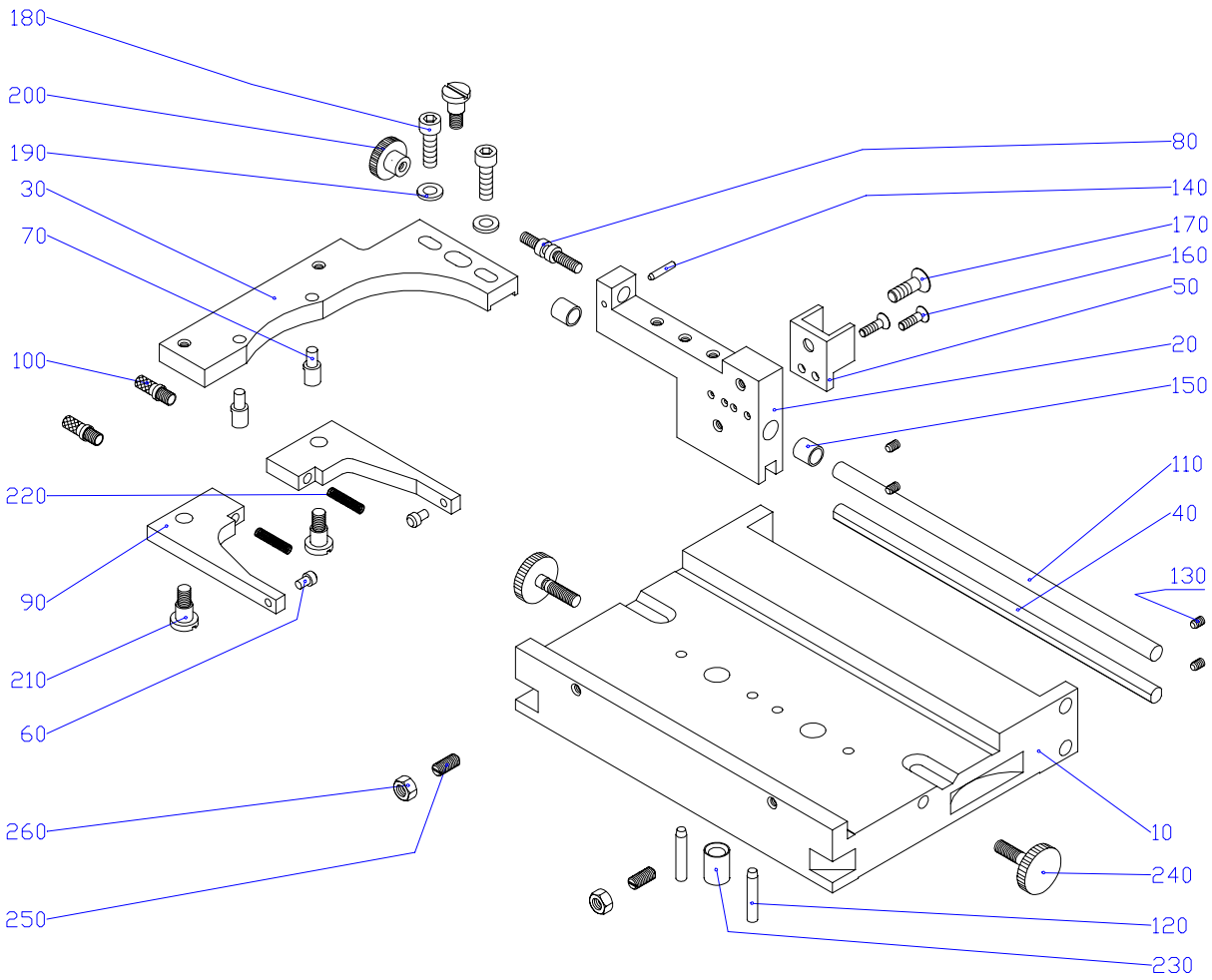
180
200
190
30
70
100
220
90
210
60
260
250
80
140
170
160
50
20
150
110
40
130
10
240
120
230

Work Knee

Item No.	Part No.	Description	W-No.
10	30100293	Vertical table	MR106727
20	30100294	Gib	MR108659
	20500047	Gearbox assembly	Includes 30 - 80
30		Gear housing	MR108660
40		Bearing cap	MR108661
50		Bevel gear	MR108662
60		Bevel gear	MR108663
70		Arbor	MR108664
80		Spacer sleeve	MR108665
90	30100296	Bracket	MR108666
100	20500050	Spindle	MR108668
110	30100295	Clamp handle	KI5010603001
120	90100465	Insert	HCM6X15
130	90100427	Insert	HCM5X5
140	90100333	Square key	DIN6885A4X4X12
150	90100183	Bushing	BUBB2012DU
160	30100294	Handwheel	GN21.3-100K12D
170	90100428	Washer	GN184-22
180	50100183	Set screw	DIN915M6X35
190	50100053	Hex nut	DIN934M6
200	50100132	Socket head cap screw	DIN912M4X14
210	90100334	Roll pin	DIN1481-4X18
220	94100021	Socket head cap screw	DIN912M6X16
230	50100215	Roll pin	DIN1481-3X18
240	90100330	Socket head cap screw	DIN912M5X65
250	90100314	Flat head SHCS	DIN7991M5X12

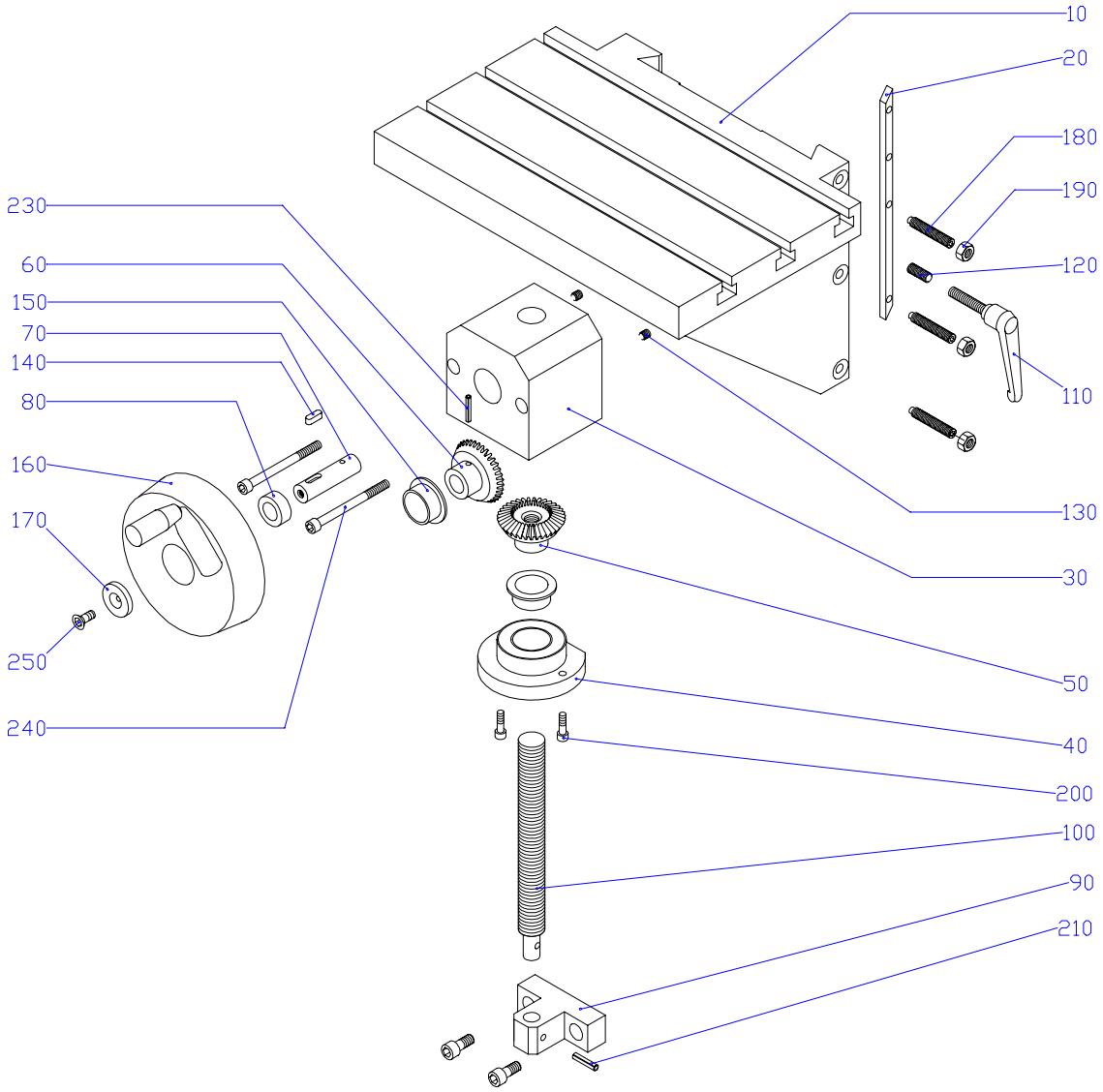
10
20
180
190
120
110
130
30
50
40
200
100
90
210
230
60
150
70
140
80
160
170
250
240

Pad Cleaning Device

Item No.	Part No.	Description	W-No.
10	90100412	Mounting plate	MR119281
20	90100413	Bar	MR119285
30	90100414	Plate	MR119286
40	90100415	Spacer	MR119288
50	90100416	Driving spool	MR105319
60	90100417	Drive hub	MR105317
70	90100418	Washer	MR105324
80	90100419	Button	MR108830
90	90100420	Spool	MR105320
100	90100421	Shaft, long	MR108708
110	90100422	Shaft, short	MR108711
120	90100423	Plate	MR500142
130	90100424	Knurled roller	MR500146
140	90100425	Shaft	MR500145
150	90100426	Roller	MR108707
160	FO11911	Rotary cylinder	PNDSR-25-180-P
170	FO151162	Flow control valve	PNGRLA-M5-PK-4B
180	90100429	Elbow	PNQSML-M5-6
190	90100430	Washer	GN184-22
200	90100431	One way clutch	LAHFL2026
210	90100432	Compression spring	FRD-171
220	30100352	Bushing	BU0808DU
230	90100316	Flat head SHCS	DIN7991M6X12
240	94100029	Socket head cap screw	DIN912M6X25
250	90100328	Socket head cap screw	DIN912M4X30
260	94100015	Set screw	DIN913M10X20
270	50100244	Flat head SHCS	DIN7991M5X10
280	50100245	Socket head cap screw	DIN912M6X12
290	50100022	Socket head cap screw	DIN912M6X40
300	50100274	Dowel pin	DIN6325-6M6X16
310	94100064	Low head SHCS	DIN7984M5X10
320	50100196	Low head SHCS	DIN7984M5X16
330	90100433	Button head screw	MSV-M6X12
	30100043	Tape, 96mm wide	

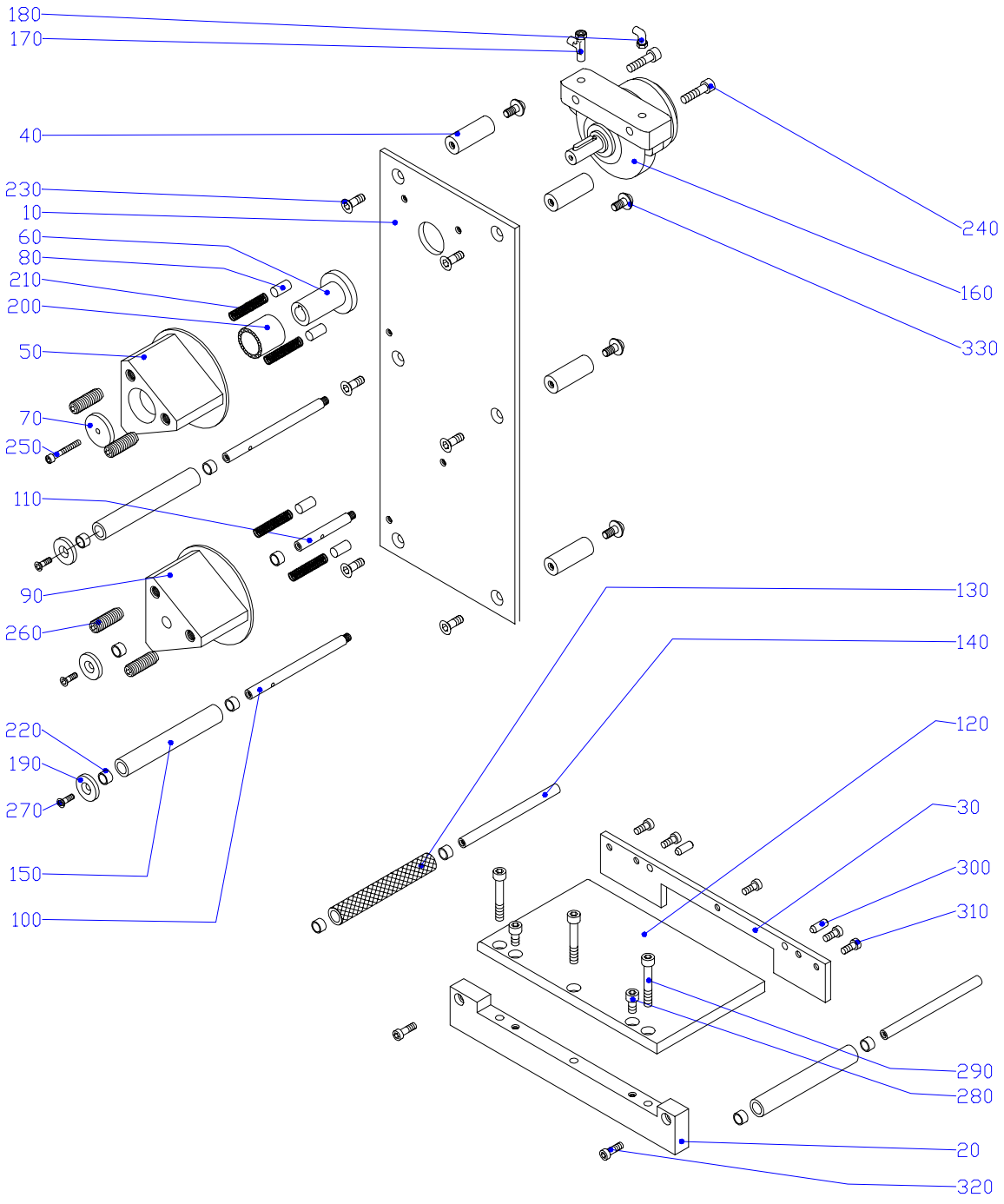
180
170
40
230
10
60
80
210
200
50
70
250
110
90
260
220
190
270
150
100
240
160
330
130
140
120
30
300
310
290
280
20
320

Guards

Item No.	Part No.	Description	W-No.
10	90100120	Door L.H.	MR119269
20	90100121	Door R.H.	MR119270
30	90100399	Mounting panel R.H.	MR119271
40	90100400	Mounting panel L.H.	MR119272
50	90100401	Cover upper	MR119274
60	90100402	Magnetic catch	MR119276
70	90100403	Block	MR119278
80	90100404	Cover rear	MR119289
90	90100405	Mounting plate	MR110141
100	90100406	Upper bearing block	MR110139
110	90100407	Lower bearing block	MR110140
120	90100408	Pivot bar	MR110138
130	90100409	Spacer	MR110142
140	90100410	Knob	KI219-106
150	91100006	Safety switch	MR106614
160	50100046	Button head screw	DIN7380M5X10
170	94100020	Socket head cap screw	DIN912M5X8
180	94100021	Socket head cap screw	DIN912M6X16
190	90100327	Socket head cap screw	DIN912M4X35
200	50100055	Washer	DIN125B4.3
210	50100041	Washer	DIN125B6.4
220	50100053	Hex nut	DIN934M6
230	50100077	Socket head cap screw	DIN912M5X16
240	50100197	Washer	DIN125B5.3
250	50100195	Socket head cap screw	DIN912M8X40
260	50100025	Washer	DIN125B8.4
270	50100219	Set screw	DIN913M5X5
280	90100310	Dowel pin	DIN6325-10M6X30
290	30100358	Bushing	BU1010DU
300	90100314	Flat head SHCS	DIN7991M5X12
310	94100021	Socket head cap screw	DIN912M6X16
320	90100411	Magnet	BM89364
330	50112030	Flat head SHCS	DIN7991M6X20
340	90100173	Flat head SHCS	DIN7991M6X16
350	90100052	Bushing	BUBB1012DU

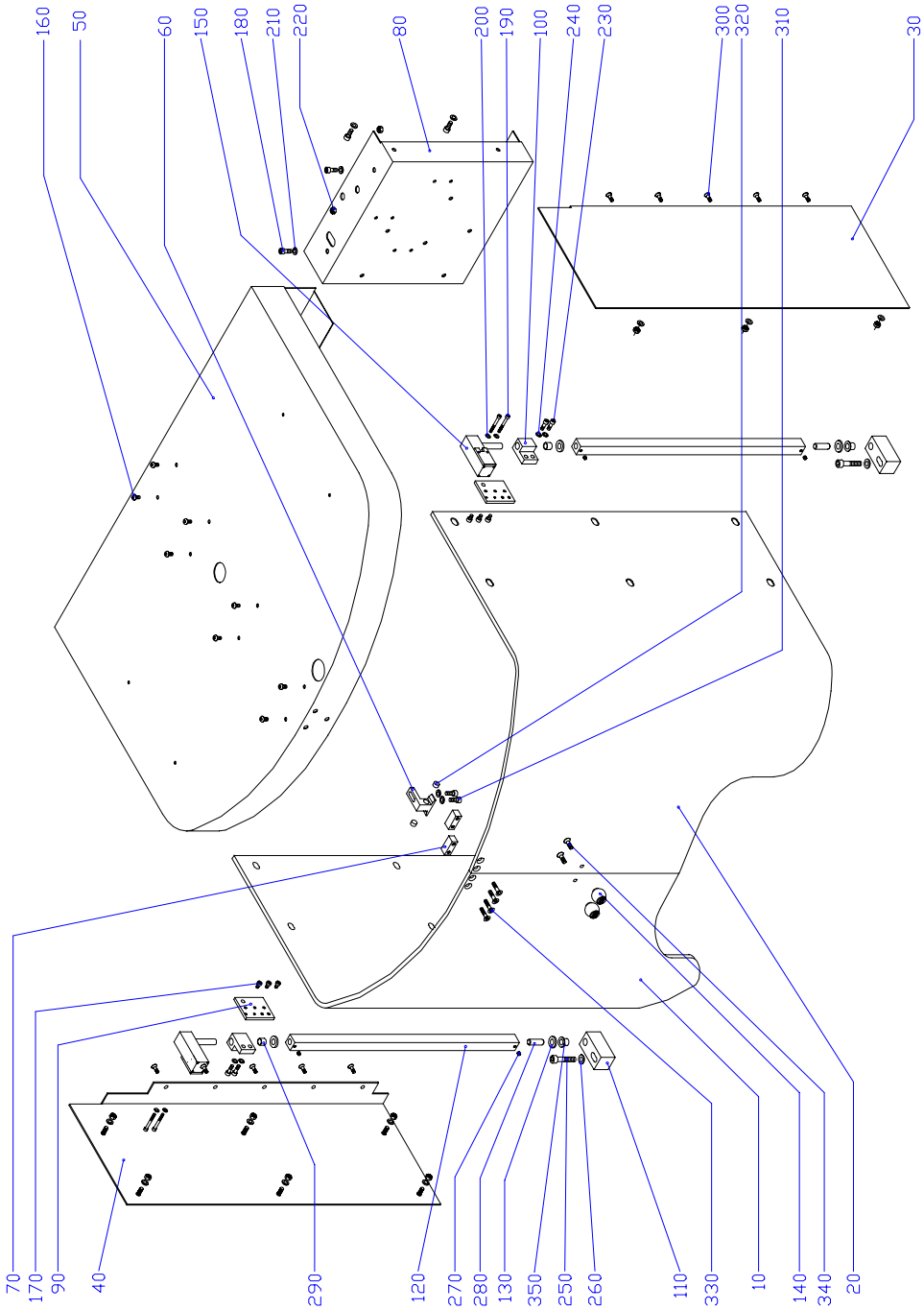
160
50
60
150
180
210
220
80
200
190
100
240
230
300
320
310
30
70
170
90
40
290
120
270
280
130
350
250
260
110
330
10
140
340
20

Electrical and Pneumatic

Item No.	Part No.	Description	W-No.
10	90100377	Switch cabinet, electric	MR119284
20	90100378	Switch cabinet,pneumatic	MR119282
30	90100379	Mounting plate, pneumatic	MR119283
40	90100380	Mounting plate, electric	MR109946
50	90100381	Support, operating pendant	MR119292
60	90100382	Support, operating pendant	MR119291
70	90100383	Stand-off	MR109331
80	90100384	Mounting angle	MR109334
90	90100385	Main switch	MR104905
100	90100386	Inverter	MR109448
110	90100387	Powerline filter	MR109442
120	90100388	Transformer	MR104850
130	90100389	Stand-off M4	MR950502
140	90100390	Control board, interface	MS-KL
150	90100391	Control board, CPU	MS-CPU
160	90100392	Stand-off M3	CO-53477344
170	90100393	Control board, I/O	MS-IO
180	90100394	Operating pendant	MSK-BP
190	90100326	Dowel pin	DIN6325-10M6X36
200	90100395	Service unit	PN164289A
210	90100396	Valve assembly	PN164289B
220	90100397	Lamp	DULUX-73111
230	90100398	Proximity switch	ELKIB-M08PS/1.5
240	90100870	Pendant cable	
250	90100871	Ribbon cable	
260	90100872	Card connecting cable	MR950550

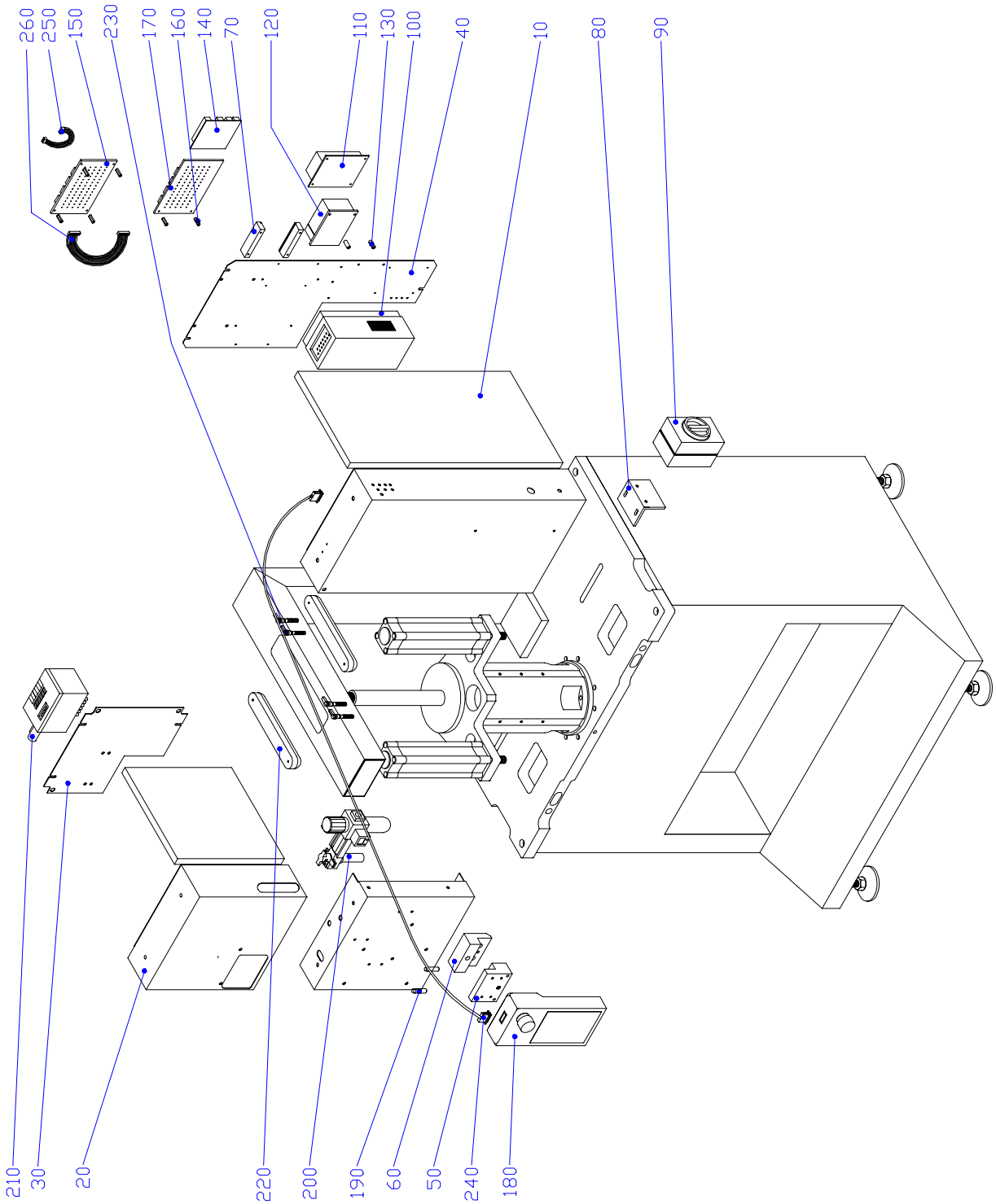
260
250
150
230
170
160
140
70
120
110
130
100
40
10
80
90
210
30
20
220
200
190
60
50
240
180

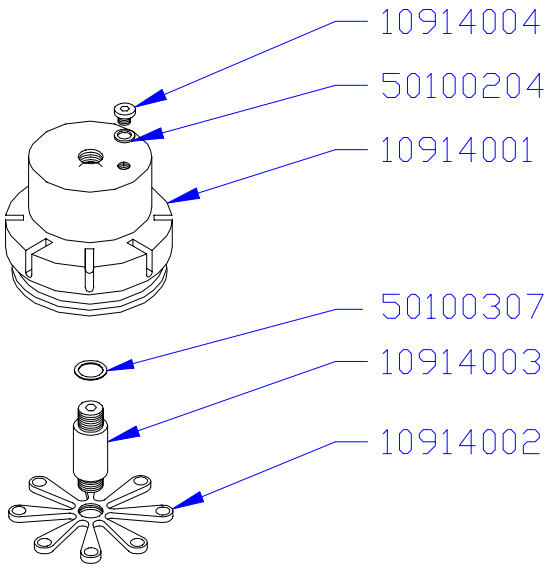

10914000 COMPLETE

Ink Cup

Part No.	Description
10914000	Ink cup - complete assembly
10914001	Cup body and ring
10914002	Magnet assembly
10914003	Magnet shaft
10914004	Vent plug
50100204	Copper seal ring
50100307	Spacer ring (0.5mm thick)

Recommended Spare Parts

Part No.	Description	Quantity
90100464	Proximity switch	1
90100372	Proximity switch	1
90100398	Proximity switch	1
91100006	Proximity switch	1
90100035	Knurled screw	2
90100359	Bushing	4
90100463	Light barrier	1
90100452	Code strip	1
90100461	Bellows	1
12004000	Pad slide (complete)	1
12004001	Pad coupler	2
30100043	Tape roll	5
90100391	CPU board	1
90100394	Operating pendant	1